BUILT WITH PASSION.
OWNED WITH PRIDE.

PRODUCT SPECIFICATIONS

Information for Built-In and Portable Grills, Doors and Drawers

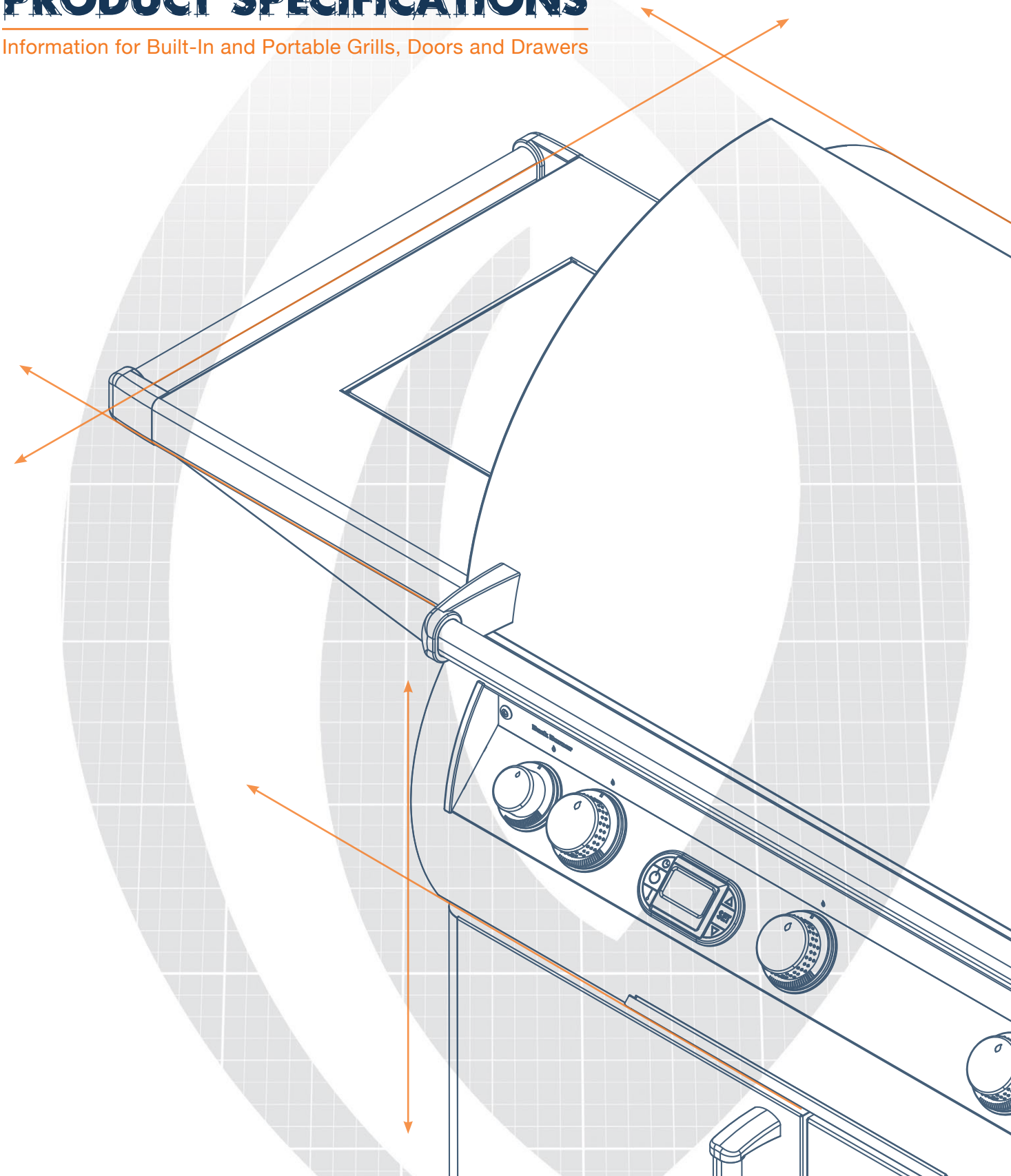

FOR ALL BUILT-IN UNITS
Must provide proper ventilation at all times whether LP or NG.

DIMENSIONS IN INCHES

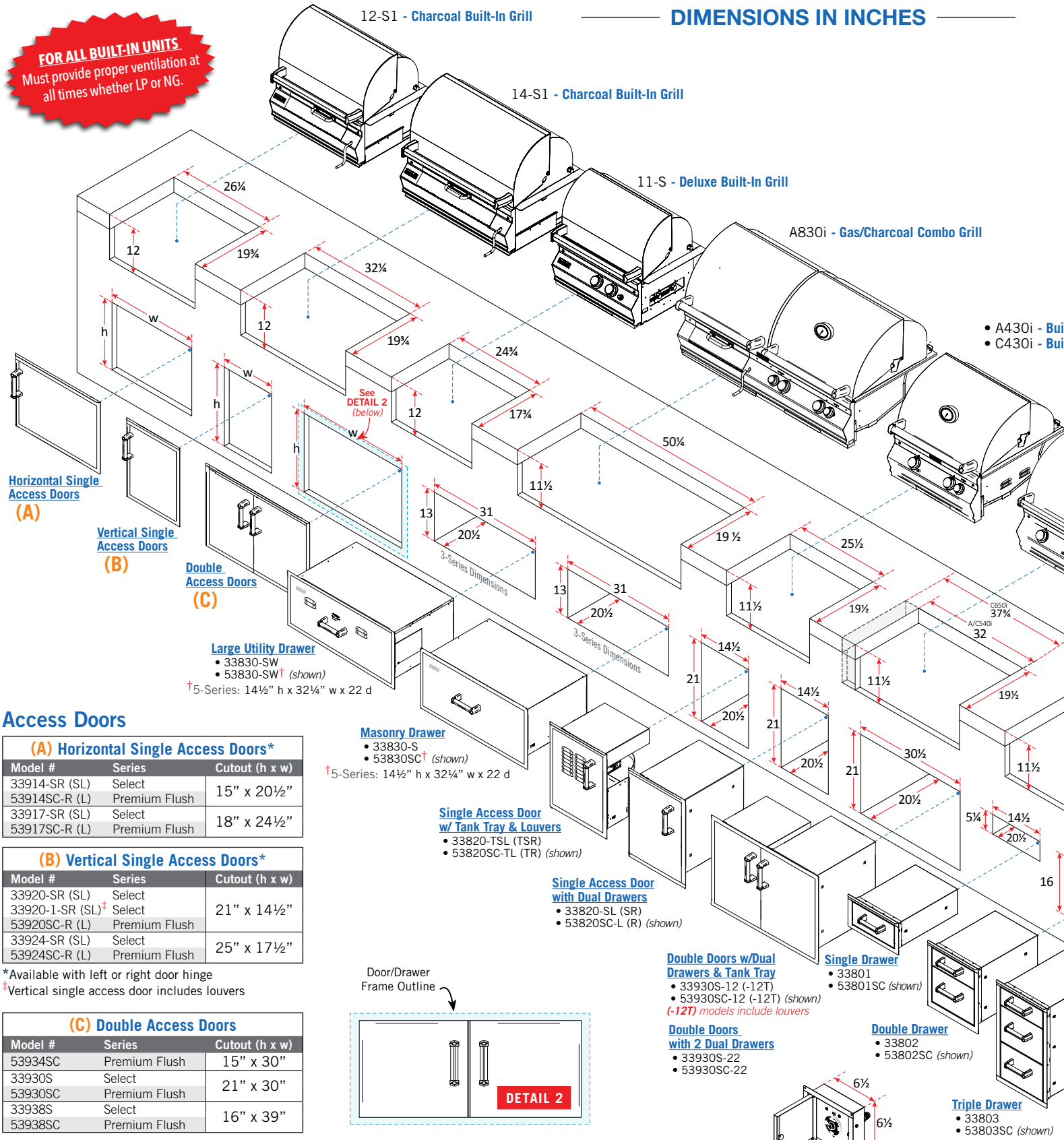

Access Doors

(A) Horizontal Single Access Doors*

Model #	Series	Cutout (h x w)
33914-SR (SL)	Select	15" x 20½"
53914SC-R (L)	Premium Flush	
33917-SR (SL)	Select	18" x 24½"
53917SC-R (L)	Premium Flush	

(B) Vertical Single Access Doors*

Model #	Series	Cutout (h x w)
33920-SR (SL)	Select	21" x 14½"
33920-1-SR (SL)‡	Select	
53920SC-R (L)	Premium Flush	
33924-SR (SL)	Select	25" x 17½"
53924SC-R (L)	Premium Flush	

*Available with left or right door hinge
‡Vertical single access door includes louvers

(C) Double Access Doors

Model #	Series	Cutout (h x w)
53934SC	Premium Flush	15" x 30"
33930S	Select	21" x 30"
53930SC	Premium Flush	
33938S	Select	16" x 39"
53938SC	Premium Flush	

Door/Drawer Frame Outline

Flange Overlap Dimensions / Select Doors

Single Doors

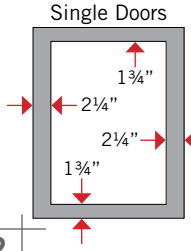

Double Doors

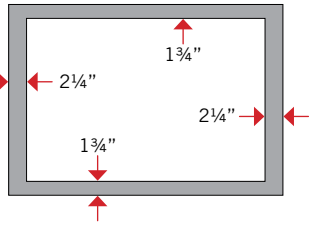

Flange Overlap Dimensions / Premium Flush Doors

Single Doors

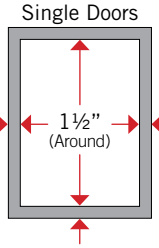

Double Doors

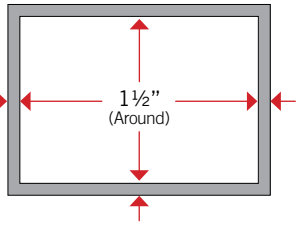

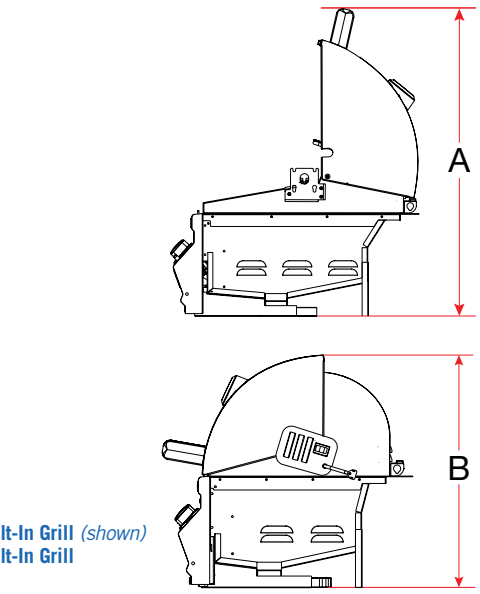

Description	Hood Open (A)	Hood Closed (B)
Echelon E1060i	36”	27”
Echelon E790i	36”	27”
Echelon E660i	36”	27”
Aurora A830i	32¼”	25⅛”
Aurora 790i	36”	27”
Aurora A660i	36”	27”
Aurora A540i/Choice C540i	32¼”	25⅛”
Aurora A430i/Choice C430i	32¼”	25⅛”
Choice C650i	32¼”	25⅛”
Deluxe 11-S	29¾”	25⅛”
32” Gourmet Charcoal 14-S1	31¾”	26½”
26” Gourmet Charcoal 12-S1	31¾”	26½”

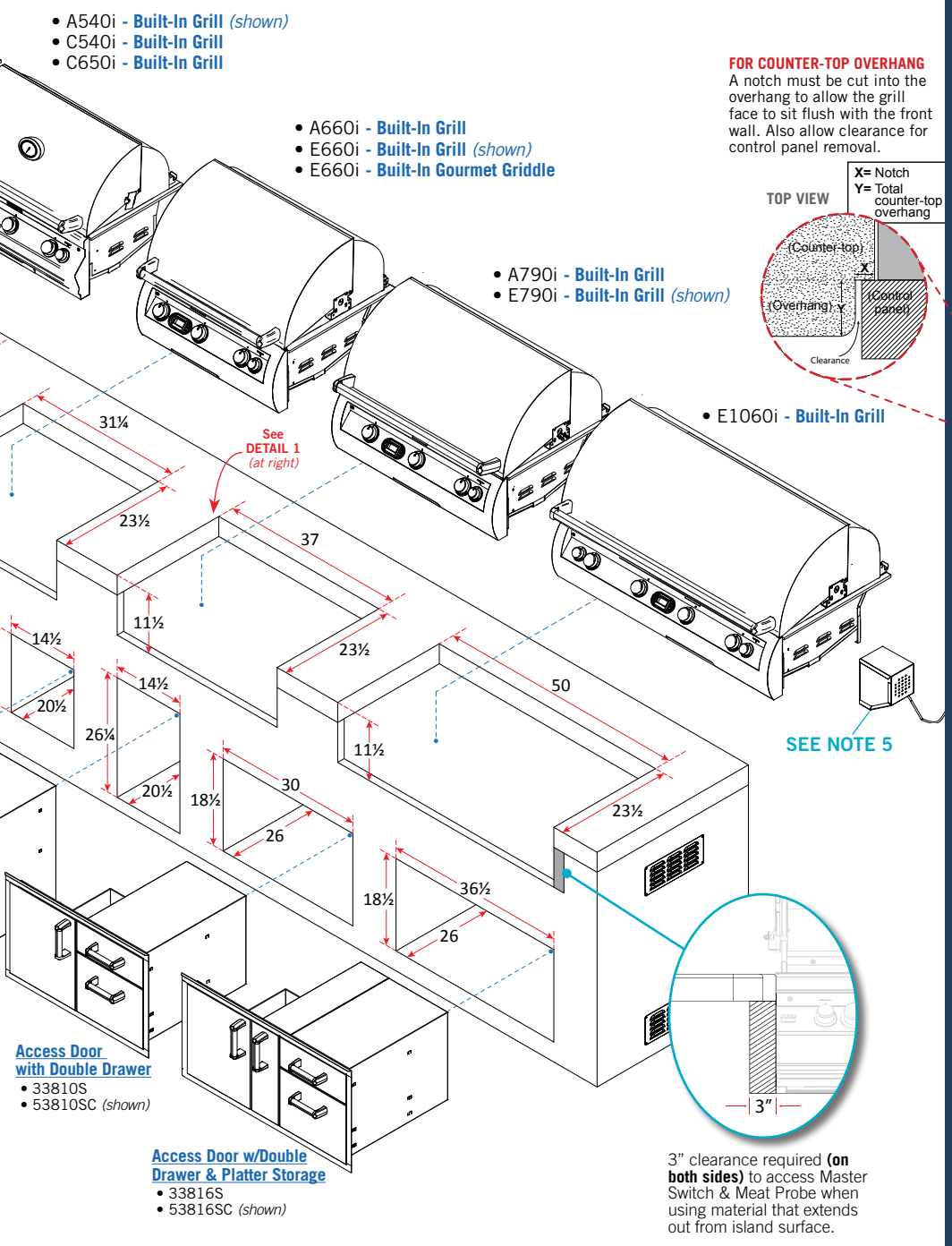

OUTDOOR KITCHEN CONSIDERATIONS

- Provide ventilation in island for gas vapors to escape. Allow at least four ventilation openings (two at floor level and two 16” above floor 10 in² each) at opposing ends/sides
- Carefully consider grill size & accessories needed
- Combustible construction requires insulating liner
- Select Natural or Propane (LP gas)
- Determine total gas consumption for supply line size
- Access is required to gas connections and shut off valve
- Plan location of propane tank away from grill and appliances
- Always refer to the installation and operating instructions of your Fire Magic® grill and/or accessories for installation guidelines & safety warnings, before starting your project
- Always check all gas connections for leaks

LOCATION

- Identify outdoor area where grill will be installed
- Determine the utilities needed (gas, water, electricity, drainage, etc.)
- Consider element exposure (sun, wind direction*, weather, etc.)

** Wind blowing into or across the rear oven lid vent can cause poor performance and/or dangerous overheating. Orient the grill so that the prevailing wind blows toward the front of the grill.*

MATERIALS

- Foundation - concrete
- Base - brick, stone, stucco, concrete
- Counter-top - tile, granite, marble, concrete

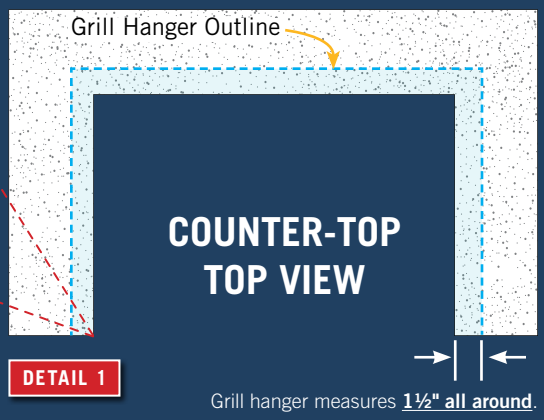

Notes

1. *There is a hanger on three sides of each grill. You must allow clearance for the hanger **(SEE DETAIL 1)**.*
2. *The control panel (face) of the grills **is wider** than the cutout width. This conceals the cutout space on the left & right hand sides.*
3. *Clearance of 10” on each side of the oven is recommended for unrestricted operation of lid and rotisserie and at least 3” at the rear flange for ease of maintenance and proper operation. (18” from combustible surroundings on each side and rear is required)*
4. *Insulating liners must be used & are available for combustible surrounds (See page 6).*
5. *The rotisserie motor on all models is located on the right side of the grill. Optional Reverse Brackets are available to mount rotisserie motor on opposite side. ONLY units ordered with back burner option come with rotisserie kit and brackets.*

DIMENSIONS IN INCHES

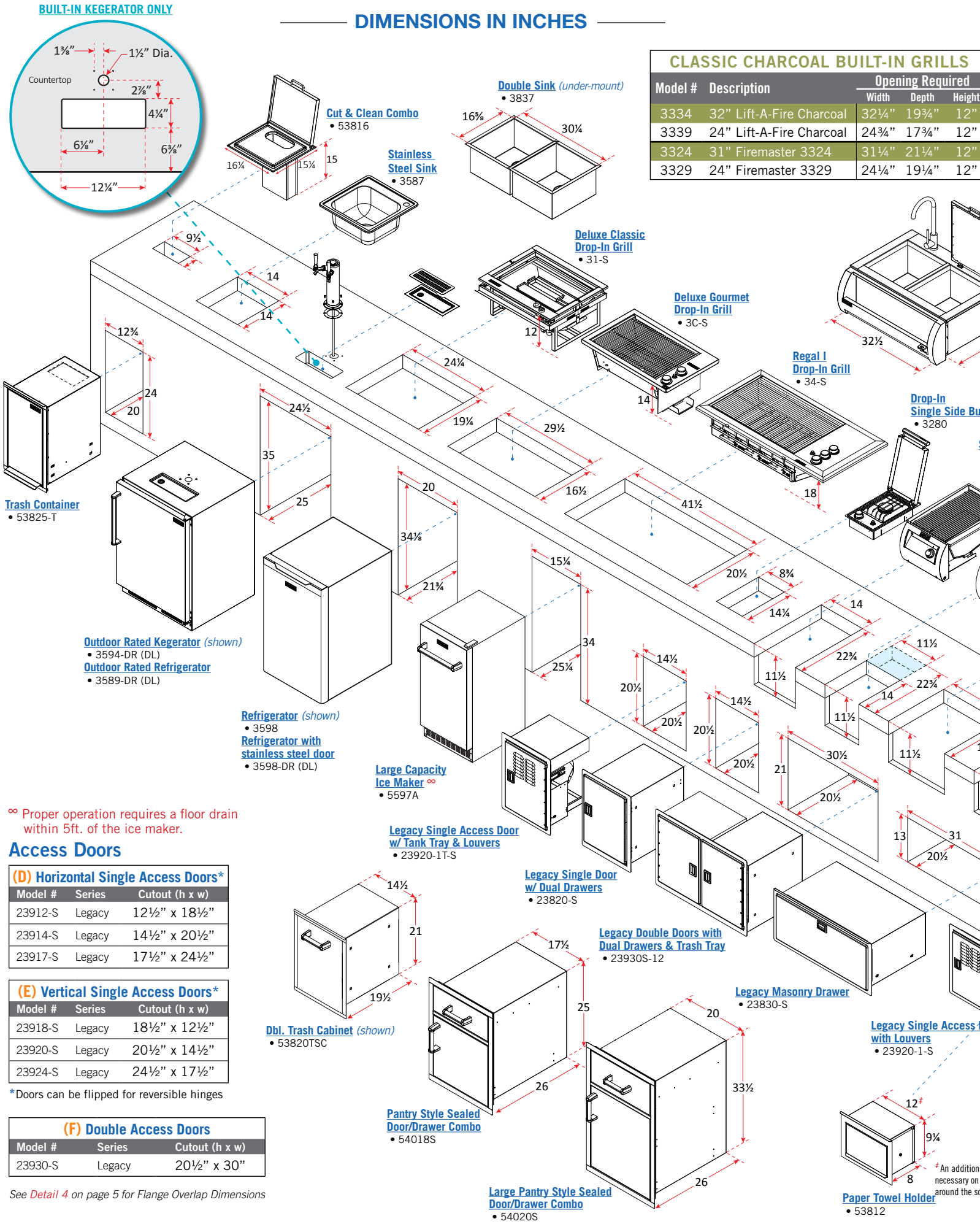

CLASSIC CHARCOAL BUILT-IN GRILLS

Model #	Description	Opening Required Width	Depth	Height
3334	32" Lift-A-Fire Charcoal	32¼"	19¾"	12"
3339	24" Lift-A-Fire Charcoal	24¾"	17¾"	12"
3324	31" Firemaster 3324	31¼"	21¼"	12"
3329	24" Firemaster 3329	24¼"	19¼"	12"

∞ Proper operation requires a floor drain within 5ft. of the ice maker.

Access Doors

(D) Horizontal Single Access Doors*

Model #	Series	Cutout (h x w)
23912-S	Legacy	12½" x 18½"
23914-S	Legacy	14½" x 20½"
23917-S	Legacy	17½" x 24½"

(E) Vertical Single Access Doors*

Model #	Series	Cutout (h x w)
23918-S	Legacy	18½" x 12½"
23920-S	Legacy	20½" x 14½"
23924-S	Legacy	24½" x 17½"

*Doors can be flipped for reversible hinges

(F) Double Access Doors

Model #	Series	Cutout (h x w)
23930-S	Legacy	20½" x 30"

See Detail 4 on page 5 for Flange Overlap Dimensions

Pedestal Grill Dimensions

- C430s-RT1P-P6

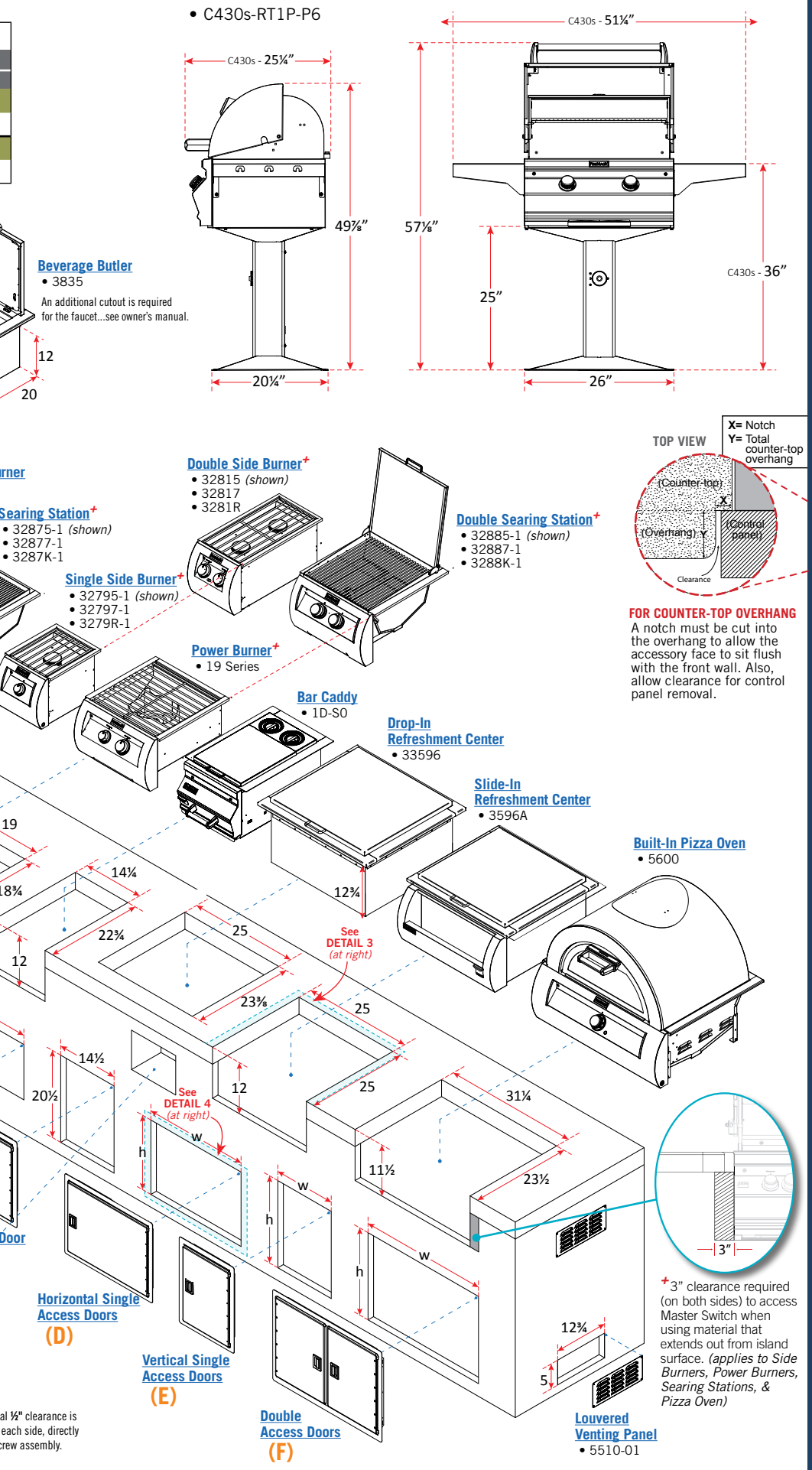

TOP VIEW

X= Notch
Y= Total counter-top overhang

(Counter-top) X
(Overhang) Y
(Control panel)
Clearance

FOR COUNTER-TOP OVERHANG
A notch must be cut into the overhang to allow the accessory face to sit flush with the front wall. Also, allow clearance for control panel removal.

+3" clearance required (on both sides) to access Master Switch when using material that extends out from island surface. *(applies to Side Burners, Power Burners, Searing Stations, & Pizza Oven)*

Notes

1. *There is a hanger on three sides of the grill **(SEE DETAIL 3)**.*
2. *The control panel (face) of the accessories **is wider** than the cutout width, this conceals the cutout space on the left & right hand sides.*
3. *Clearance of 10" on each side, and 3" at the rear of the oven is recommended for unrestricted operation of accessories. (18" from combustible surroundings on each side and rear)*
4. *Insulating liners must be used and are available for combustible surrounds. Double Side burner (3281), Single Side burner (3279-1) and Drop-In Side burner (3280) do not require an insulating liner (See page 6).*

Most accessory hangers measure **1½" all around**.

The exceptions are: The Bar Caddy (1D-S0), The Beverage Butler (3835), Refreshment Centers (3596A, 33596), and Beverage Centers (1D-SSA, 1D-SSD)... these units have a hanger that measures **2½"all around**.

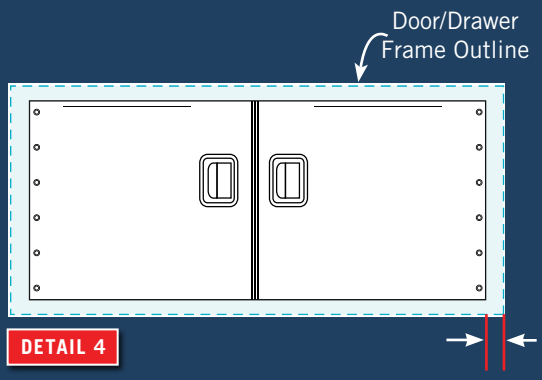

Door frame varies in width **(1"-2" ALL AROUND)** depending on the size & configuration of the door & drawer.

Flange Overlap Dimensions / Legacy Doors

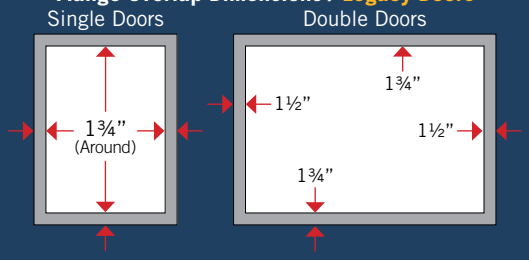

INSULATING LINER MUST BE USED WHEN INSTALLING IN A COMBUSTIBLE ISLAND

Not used on Double Side burner (3281), Single Side burner (3279-1) or Drop-In Side burner (3280) ‡

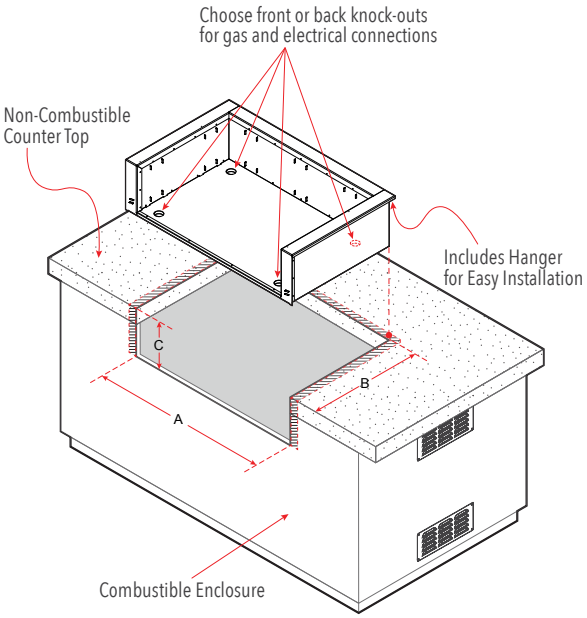

INSULATING LINER CUT-OUT DIMENSIONS (ECHELON, AURORA & CHOICE GRILLS)

Grill Model	Insulating Liner Part #	Opening Required Width	Depth	Height
Echelon		(A)	(B)	(C)
E1060i	3185-52	54⅞”	26”	12¼”
E790i	3186-52	42”	26”	12¼”
E660i	3176-52	36¼”	26”	12¼”
Aurora				
A790i	3186-52	42”	26”	12¼”
A660i	3176-52	36¼”	26”	12¼”
A540i	23150-52	37”	22⅛”	12¼”
A430i	23130-52	30⅜”	22⅛”	12¼”
Choice				
C650i	3177-52	42½”	22⅛	12¼”
C540i	23150-52	37”	22⅛”	12¼”
C430i	23130-52	30⅜”	22⅛	12¼”

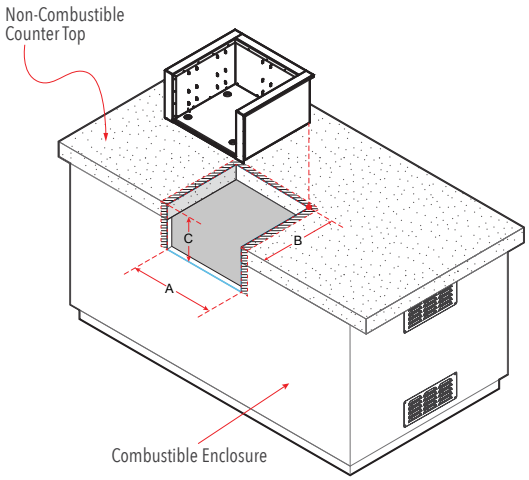

INSULATING LINER CUT-OUT DIMENSIONS (LEGACY & ACCESSORIES)

Product Model	Insulating Liner Part #	Opening Required Width	Depth	Height
		(A)	(B)	(C)
Deluxe Grill	3100-51	28⅜”	19¾”	12¼”
Power Burner	3278-52	23”	20⅞”	12¼”
Dbl. Searing Station	3278-52	23”	20⅞”	12¼”
Searing Station	3287-52	18½”	24¾”	12¼”

‡ Single and Double Side Burners may be installed into a combustible enclosure provided there is a minimum of a **1/2" airspace between ALL SIDES** of the unit and any combustible material.

To install and operate *the Fire Magic® outdoor gas appliance, please refer to the Installation and Operating instructions and safety precautions shipped with the appliance.*

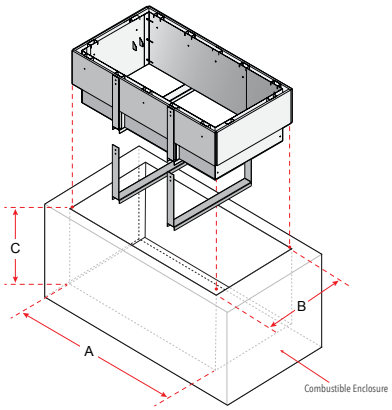

INSULATING LINER CUT-OUT DIMENSIONS (DROP-IN GRILLS)

Product Model	Insulating Liner Part #	Opening Required Width	Depth	Height
		(A)	(B)	(C)
Regal Gourmet Drop-In	3270-50	44⅞	24¼	24¾
Deluxe Gourmet Drop-In	3220-50	31⅜	19⅝	19
Deluxe Classic Drop-In	3200-50*	28½	23⅝	14

**Insulating liner for Deluxe Classic Drop-In grill is not represented in the diagram.*

The information provided is for reference only. Detailed instructions are supplied with the insulation liner, unique to the model selected. Read those instructions carefully and completely before starting installation of the liner.

ECHELON PORTABLE GRILLS & GRIDDLE

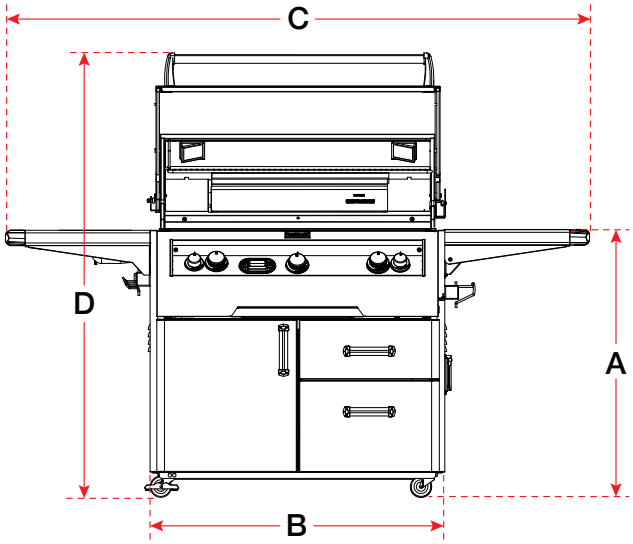

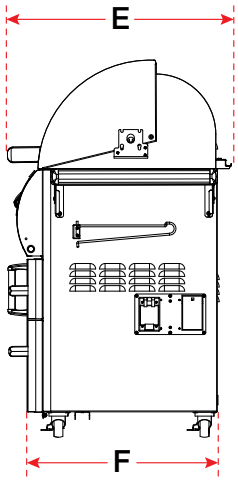

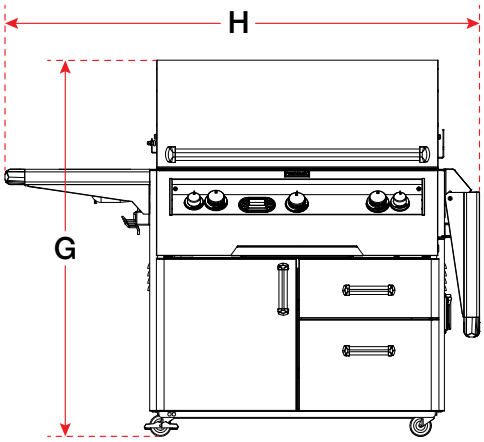

Model #	Series	Top of Shelf *height*	Cart Base *width*	Shelves Up *width*	Oven Open *height*	Max Outer *depth*	Cart Base *depth*	Oven Closed *height*	1-Up/1-Down *width*	Shelves Down *width*
		(A)	(B)	(C)	(D)	(E)	(F)	(G)	(H)	(I)
E1060s	62	37”	53⅛”	92¼”	61⅜”	30½”	26”	52½”	69¾”	n/a
E1060s	51	37”	77¾”	117”	61⅜”	30½”	26”	52½”	96¾”	n/a
E790s	62	37”	40”	79¼”	61⅜”	30½”	26”	52½”	62¾”	n/a
E790s	71	37”	58¾”	98”	61⅜”	30½”	26”	52½”	83¾”	n/a
E660s	62	37”	34¼”	73½”	61⅜”	30½”	26”	52½”	59”	n/a

AURORA/CHOICE PORTABLE GRILLS

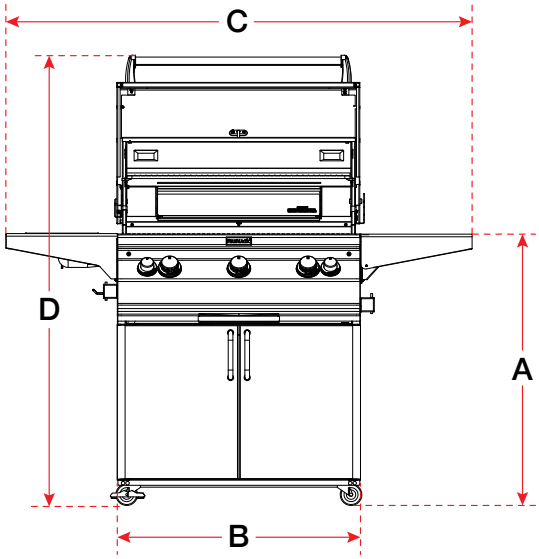

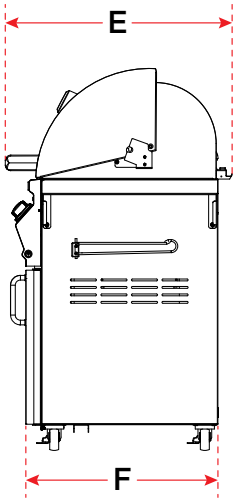

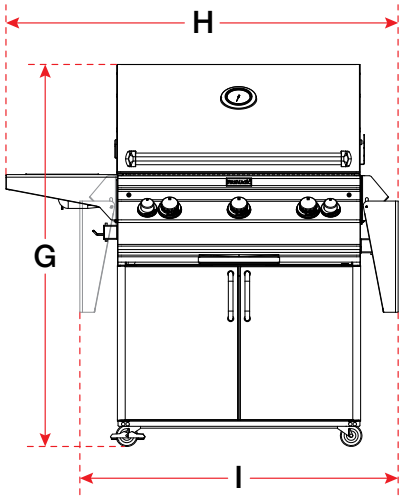

Grill Model #	Series	Top of Shelf *height*	Cart Base *width*	Shelves Up *width*	Oven Open *height*	Max Outer *depth*	Cart Base *depth*	Oven Closed *height*	1-Up/1-Down *width*	Shelves Down *width*
		(A)	(B)	(C)	(D)	(E)	(F)	(G)	(H)	(I)
A660s	61/62	37”	32½”	61¼”	60⅞”	30½”	26”	52”	51”	40½”
A540s	61/62	37”	32½”	62¼”	57¼”	26”	21¾”	50”	52”	41½”
A430s	61/62	37”	26”	55¾”	57¼”	26”	21¾”	50”	45½”	35¼”

VENT HOODS

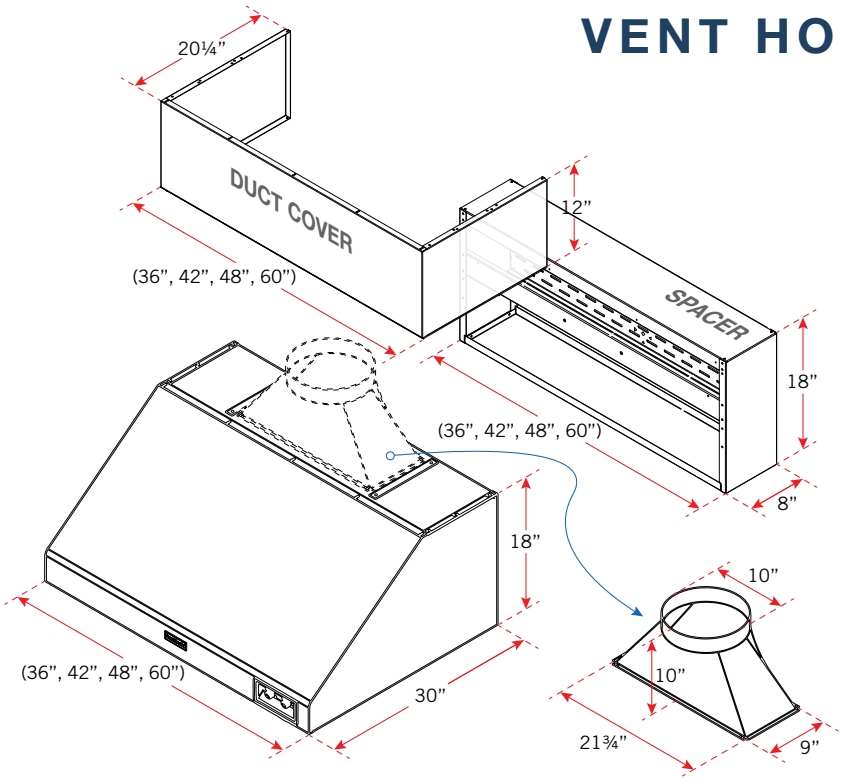

MODELS AVAILABLE

VENT HOODS	SIZE	DUCT COVERS*	SPACERS*
36-VH-7	36"	36-VH-7-DC	36-VH-7-02
42-VH-7	42"	42-VH-7-DC	42-VH-7-02
48-VH-7	48"	48-VH-7-DC	48-VH-7-02
60-VH-7	60"	60-VH-7-DC	60-VH-7-02

** Duct Covers and Spacers must be used together.*

SPECIFICATIONS

Electrical Requirements	120VAC / 15 AMP minimum / 60 Hz / GFCI outlet
Convertible Fans *(top-vent or rear-vent)*	120 volts, 1200 CFM High Pressure Output
Power Consumption	1,010 watts
Halogen Lights Rating	**120V / 50 watt** halogen light bulb

Fire Magic® Outdoor Grill Warranty Highlights

Lifetime Warranty

CAST STAINLESS STEEL BURNERS, CHOICE STAINLESS STEEL U-SHAPED BURNERS, DIAMOND SEAR AND ROD STAINLESS STEEL COOKING GRIDS, AND STAINLESS STEEL HOUSINGS ARE WARRANTED FOR AS LONG AS YOU OWN YOUR FIRE MAGIC® GRILL.

Fifteen (15) Year Warranty

BRASS VALVES, INNER LINERS, MANIFOLD ASSEMBLIES, PORCELAIN HOUSINGS (INCLUDING OVENS AND BARBECUE FACES), AND BACKBURNER ASSEMBLIES (EXCEPT IGNITION PARTS).

Ten (10) Year Warranty

ELECTRIC GRILLS STAINLESS STEEL COOKING GRIDS AND HOUSINGS.
GOURMET GRIDDLES AND PIZZA OVENS (EXCEPT IGNITION AND ELECTRONIC PARTS).

Five (5) Year Warranty

FLAVOR GRIDS, INFRARED BURNERS IN THE GRILL, AND CHARCOAL STAINLESS STEEL GRILLS (EXCEPT FOR THE CHARCOAL PAN, CHARCOAL GRID, THERMOMETER AND ASH TRAY; WHICH ARE WARRANTED FOR ONE (1) YEAR).

Three (3) Year Warranty

SIDE BURNERS AND ALL OTHER FIRE MAGIC® GRILL, GOURMET GRIDDLE AND PIZZA OVEN COMPONENTS (EXCEPT IGNITION AND ELECTRONIC PARTS).

One (1) Year Warranty

IGNITION SYSTEMS (EXCEPT BATTERIES), ELECTRONIC COMPONENTS (INCLUDING LIGHTS & THERMOMETERS) AND GRILL, GOURMET GRIDDLE AND PIZZA OVEN ACCESSORIES.

FIRE MAGIC® RESERVES THE RIGHT TO AMEND PRODUCT SPECIFICATIONS WITHOUT PRIOR NOTICE.

The information provided in this document is for reference purposes only. Detailed instructions & specifications unique to the product purchased can be found in the Owner's Manual. Read those instructions carefully and completely before attempting installation of any Fire Magic® Outdoor Grill product.

FIREMAGIC

R.H. Peterson Co. • 14724 Proctor Ave, City of Industry, CA 91746 • www.firemagicgrills.com • Ph. (800) 332-3973 • Fax (626) 369-5979

Rev. 0 - 2210061110 L-C1-01323