FIREMAGIC®

ECHELON

DIAMOND SERIES

Built-in Outdoor Gas Pizza Oven Quick Start Guide

IMPORTANT: You must read the installation and owner's manual provided with the pizza oven.

INSTALLER: Leave these instructions with consumer. **CONSUMER:** Retain for future reference.

1 - Safety

CAUTION: WHEN INSTALLING UNIT, BE AWARE OF ENCLOSURE REQUIREMENTS; YOU MUST VENT UNIT IN ACCORDANCE WITH YOUR OWNER'S MANUAL. FAILURE TO DO SO MAY RESULT IN A FIRE OR EXPLOSION CAUSING PROPERTY DAMAGE, BODILY INJURY, OR DEATH.

This unit must be installed in accordance with local codes and ordinances, or, in the absence of local codes, with either the latest National Fuel Gas Code (ANSI Z223.1/NFPA 54), and Natural Gas and Propane Storage and Handling Installation Code (CSA-B149.1).

This appliance and its individual shutoff valves must be disconnected from the gas-supply piping system when testing the system at pressures in excess of ½ psig. This appliance must be isolated from the gas-supply piping system by closing its dedicated manual shutoff valve during any pressure testing of the gas-supply system at pressures up to and including ½ psig.

This unit is designed for outdoor use only. DO NOT use this unit inside a building, garage, or enclosed area (see paragraph below). DO NOT install this unit in or on a recreational vehicle or boat.

Important: If installing this unit in a COMBUSTIBLE enclosure, the correct RHP insulating liner must be used. Consult the liner instructions for cutout dimensions and installation.

A minimum 5 foot clearance is required between the countertop and the overhead construction. When installed under combustible overhead construction, the area above the cooking surface of the unit **must** be covered with an exhaust hood. The exhaust hood provides the protection for the combustible overhead construction. **DO NOT use this appliance under unprotected combustible overhead construction**. When installed under overhead non-combustible construction, an exhaust hood is highly recommended. **When using an exhaust hood:** the area above the pizza oven must be covered with a hood larger than the cooking area of the unit, and with a minimum of 1200 CFM (cubic feet per minute) for proper outdoor application. Custom spacers must be constructed entirely of non-combustible materials only. Custom soffits may be constructed of wood, metal framing, etc.

Installation must be performed by a qualified professional service technician.

2 - Unpacking

Carefully unpack the unit and all components, removing all packing material and protective film. Verify that all parts have arrived undamaged by consulting the parts list in the owner's manual.

If any parts are missing or damaged, immediately contact the Fire Magic dealer before beginning installation.

3 - Installation

This section in only an overview of installation. Installation MUST NOT be performed without completely reading and understanding all information found in the owner's manual.

It is not necessary to remove the control panel or knob for installation.

Location

Refer to the INSTALLATION REQUIREMENTS section of your pizza oven owner's manual for complete details.

Proper airflow (front-to-back) must be maintained as shown in Fig. 3-1. Do not block the 1" front air inlet.

CAUTION: Wind blowing into or across the oven exhaust can cause poor performance and/or dangerous overheating. Install the pizza oven so that the prevailing wind blows toward the front of the unit. A wind deflector is equipped to assist in proper airflow during windy conditions. See Fig. 3-2.

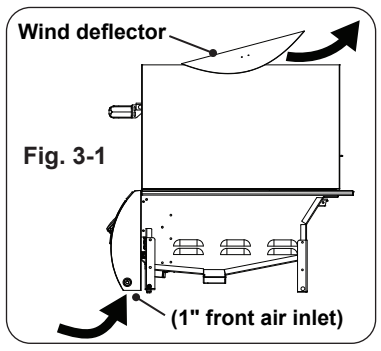

Fig. 3-1

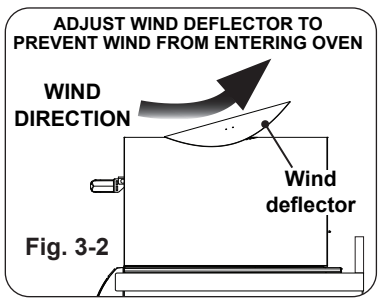

Fig. 3-2

Build / Construct Enclosure

GFRC islands are available for this pizza oven. Build the enclosure per the instructions supplied with the unit.

Alternatively, a custom-built enclosure can be constructed. Construct the enclosure according to your individual install preference, while following the guidelines found in the ENCLOSURE REQUIREMENTS and INSTALLATION REQUIREMENTS sections of the pizza oven owner's manual.

Slide Unit Into Enclosure Cutout

If Cutout is Open/Exposed to Interior of Enclosure: Carefully slide the unit into the enclosure cutout, being sure to simultaneously route the control box down into the enclosure. If needed, lift and support the front of the unit to provide clearance when inserting the box.

If Using an Insulating Liner or If Enclosure Has a Solid Area Beneath Unit: The install involves more details as the control box will need to be disconnected. Refer to the pizza oven owner's manual for all steps.

When the unit is in place, ensure the control panel sits flush against the enclosure front wall as shown in Fig. 3-3.

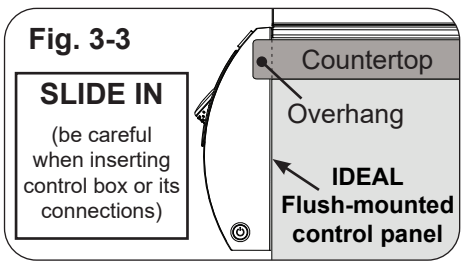

Fig. 3-3

Rotate the front support adjustment bolts (up or down) until the pizza oven hanger rests flush on the countertop, AND, the adjustment bolts are touching the supporting structure found at the bottom of the cutout (lower support). Use a 7/16" open-end wrench as needed. See Fig. 3-4.

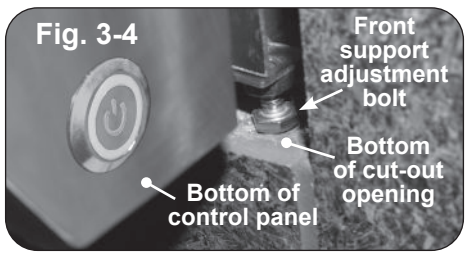

Fig. 3-4

Install Control Box

Route all the connections directly downward and mount the control box inside the enclosure. Connect to power outlet.

Connect Gas Supply

These quick start instructions assume a **natural gas or household propane** configured unit. **See main instructions for propane cylinder units.**

Note: This section is only an overview of installation to the gas supply. Refer to the pizza oven owner's manual for complete installation details.

Turn off the gas supply at the source. Run the flex connector (coming from the control box) to the gas supply stub and connect. Use a pipe joint compound resistant to all gasses on all NPT pipe fittings **except flare fittings. See INSTALLATION section of owner's manual for complete details.**

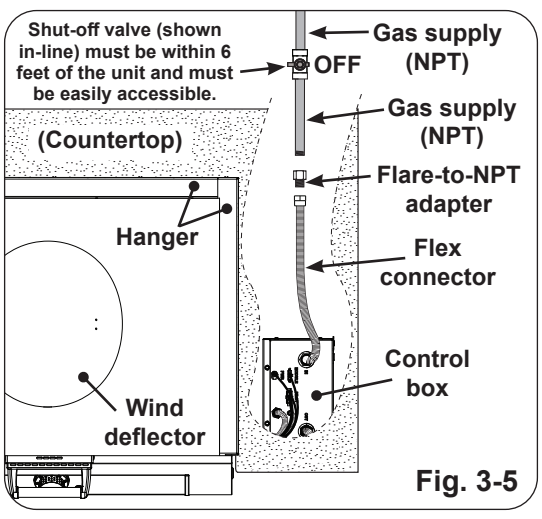

Fig. 3-5

Leak Test

Turn the control knob to the **OFF** position. Turn on the gas supply, and test at all connections for leaks using a soapy water solution. If bubbles appear, a leak is present. Turn off the gas and tighten at all connections. Repeat until no leaks are present. If a leak persists, turn off the gas supply and contact the local gas company or dealer. **NEVER USE A FLAME TO CHECK FOR LEAKS.**

Note: If ANY disconnections were made from the control box, the pizza oven pilot and burners will need to be ignited to properly leak test where any re-connections were made.

4 - Lighting Test

During installation, the installer **MUST** perform a lighting test and pilot inspection. This is required to purge the gas line of air, and inspect the pilot spark and flame. This important procedure is fully detailed in the owner's manual supplied with the unit and **MUST** be read and followed.

- The air **MUST** be purged from the gas line before the pilot will light and ignite the burners - this may take several minutes.
- The pilot electrode stops sparking after one minute of trying to light the pilot. If the electrode stops sparking and the pilot has not yet lit, turn the control knob to OFF position and repeat the lighting sequence.

CAUTION: DO NOT attempt to light the oven by hand.

Note: This unit must be connected to 120VAC power for electronic lighting. If power is unavailable, a battery pack is included to power the ignition system. See BATTERY PACK section of pizza oven owner's manual.

1. Open the oven door (lift handle to unlock, then pull to open).
2. Turn the control knob to the **OFF** position.
3. Turn on the gas at its source. Then press the power switch (see Fig. 4-1).
4. Turn the control knob clockwise to the desired temperature. (The red LED status light indicates the unit is in the lighting process.)
   The igniter will begin to spark. After the pilot lights and is established, the valve will open and the burners will light.

Note: This sequence will take approximately 5 seconds.

Important: Visually inspect the burner flames via the two rectangular flame viewing slots (see Fig. 4-1).

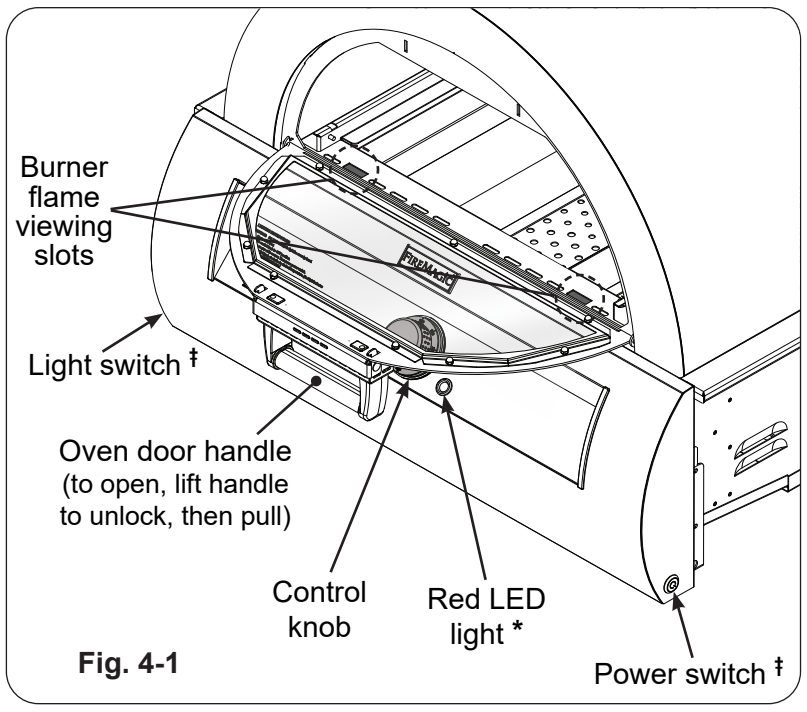

Fig. 4-1

CAUTION: If the burners do not light within ten (10) *seconds* of turning on the control knob, turn it to the **OFF** position. WAIT FIVE (5) *MINUTES* before repeating step 4. If you smell gas, follow the instructions on the cover of this manual. If the burners still do not light after several attempts, turn the system **OFF** and contact a qualified professional service technician.

Note: **DO NOT** use excessive force when turning the knob.

For your convenience and safety, when the ignition system is lighting the unit AND when the burners are lit, the red LED status light will illuminate (see Fig. 4-2).

Note: The burners operate intermittently as the pizza oven maintains a constant temperature.

* The **red LED status light** illuminates when the pilot is lighting OR the burners are on.

† The **power switch** is push button operated and is located on the right side of the control panel. It controls power to the thermostat system. The switch will need to be turned on prior to pizza oven use, remain on during use, and turned off after each use.

‡ The **light switch** is push button operated and is located on the left side of the control panel. It controls power to the oven light and control knob backlight LED disc.

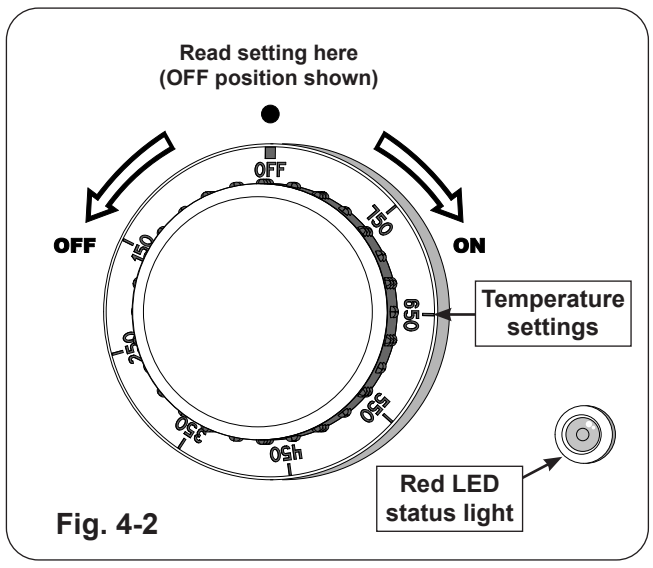

Fig. 4-2

WHEN OPERATING THIS GAS APPLIANCE, ALL INSTRUCTIONS AND WARNINGS MUST BE OBSERVED. FAILURE TO DO SO MAY RESULT IN A FIRE OR EXPLOSION CAUSING PROPERTY DAMAGE, BODILY INJURY, OR DEATH.

5 - Oven Components Setup

Parts Placement Checklist

Place the following items according to their position and orientation in Fig. 5-1:

Pizza stone with support frame, baking rack (if desired), and analog oven thermometer (as needed).

Leave pre-installed burners and heat distribution grids in place to maintain proper alignment.

Pizza Stone

Carefully place the stone into the support frame. Then, carefully insert the stone/frame into the cold oven by sliding the frame inward (as centered as possible). Be sure to align the two notches over the pegs found on the oven side rails.

Baking Rack (if desired)

Locate the four holes on the oven side rails and align/insert the baking rack legs into the four holes to secure the rack in place.

Analog Oven Thermometer (as needed)

Place the oven thermometer inside the oven and rest it directly on the pizza stone (or baking rack if installed).

Important: See your pizza oven owner's manual for complete installation details.

Replacement parts can be ordered from your local Fire Magic dealer.

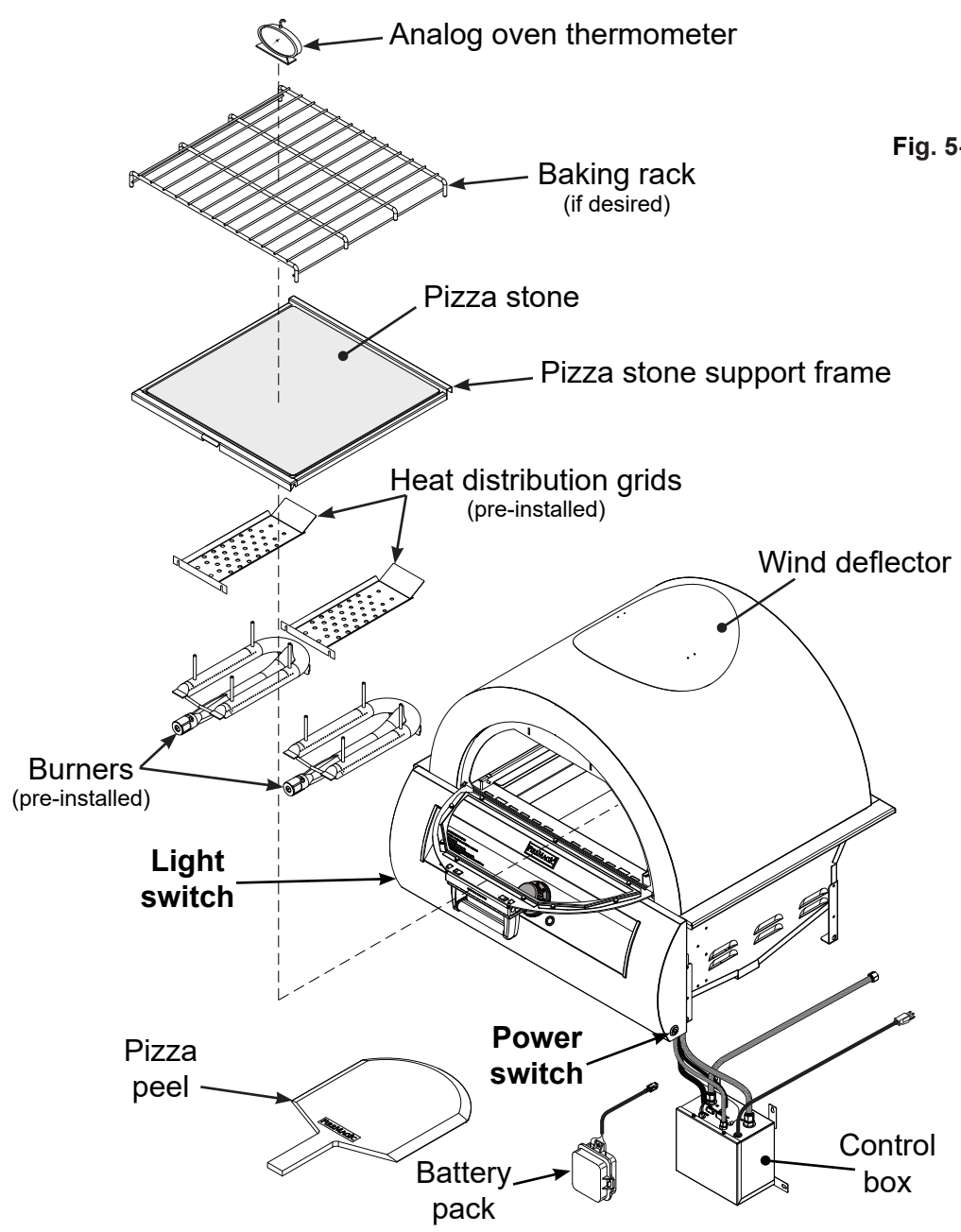

Fig. 5-1

6 - Propane and Natural Gas Safety

FOR PROPANE CONFIGURATIONS; READ ALL SAFETY INSTRUCTIONS AND WARNINGS REGARDING THE USE OF PROPANE GAS FOUND IN YOUR OWNER'S MANUAL. FOR NATURAL GAS READ ALL SAFETY INSTRUCTIONS AND WARNINGS FOUND IN YOUR OWNER'S MANUAL.

7 - Routine Maintenance

Your pizza oven must be serviced and maintained properly to ensure optimal performance, appearance, and safety. Clean your pizza oven before and after each use. Additionally, a deep clean of the entire unit and all its components be performed twice a year (or as needed depending on use). See owner's manual for details.