FIREMAGIC

ECHELON

DIAMOND SERIES

PORTABLE OUTDOOR GAS GRIDDLE

E660s-0T4(N,P)

INSTALLATION AND OWNER'S MANUAL

INSTALLER: Leave these instructions with consumer.
CONSUMER: Retain for future reference.

IMPORTANT: READ THESE INSTRUCTIONS CAREFULLY BEFORE STARTING INSTALLATION OR USE.

WARNINGS AND SAFETY CODES

⚠ DANGER:

IF YOU SMELL GAS:

1. Shut off the gas to the appliance.
2. Extinguish any open flame.
3. Open lid.
4. If odor continues, keep away from the appliance and ***immediately*** call your gas supplier or the fire department.

ONLY TO BE USED OUTDOORS

CODE AND SUPPLY REQUIREMENTS: This griddle must be installed in accordance with local codes and ordinances, or, in the absence of local codes, with the latest *National Fuel Gas Code (ANSI Z223.1/NFPA 54),* or *Natural Gas and Propane Storage and Handling Installation Code (CSA-B149.1).*

This appliance and its dedicated manual shutoff valve must be disconnected from the gas-supply piping system when testing the system at pressures in excess of ½ psig (3.5 kPa).

This appliance must be isolated from the gas-supply piping system by closing its dedicated manual shutoff valve during any pressure testing of the gas-supply system at pressures up to and including ½ psig (3.5 kPa).

Proper operation of your griddle requires prompt and periodic maintenance. See the SERVICING AND CLEANING section for details.

⚠ WARNING:

1. Do not store or use gasoline or other flammable vapors and liquids in the vicinity of this or any other appliance.
2. An LP cylinder not connected for use shall not be stored in the vicinity of this or any other appliance.

⚠ WARNING:

Improper installation, adjustment, alteration, service, or maintenance can cause injury or property damage. For proper installation, refer to the installation instructions. For assistance or additional information, consult a qualified professional service technician, service agency, or the gas supplier.

This appliance is designed as an <u>attended appliance</u>. <u>DO NOT</u> leave this appliance burning when unattended.

All electrical outlets in the vicinity of the griddle must be properly grounded in accordance with local codes, or, in the absence of local codes, with the *National Electrical Code, ANSI/NFPA 70,* or the *Canadian Electrical Code, CSA C22.1,* whichever is applicable.

Keep all electrical-supply cords and fuel-supply hoses away from any heated surface.

PFS® C US **Certified to: ANSI Z21.58 CSA 1.6**

Robert H. Peterson Co. • 14724 East Proctor Avenue • City of Industry, CA 91746

INSTALLATION INSTRUCTIONS ET MANUEL DU PROPRIÉTAIRE

PLATINE GAZ EXTÉRIEURE AU GAZ D'ÉCHELON

IMPORTANT: LISEZ CES INSTRUCTIONS SOIGNEUSEMENT AVANT DE COMMENCER L'INSTALLATION OU L'UTILISATION

SÛRETÉ ET CODES D'AVERTISSEMENT

⚠ DANGER:

SI VOUS SENTEZ LE GAZ :

1. Coupez le gaz à l'appareil.
2. Éteignez-vous n'importe quelle flamme nue.
3. Ouvrez le couvercle si équipé d'un four.
4. Si l'odeur continue, gardez loin de l'appareil et appelez immédiatement votre département de fournisseur ou de feu de gaz.

À UTILISER UNIQUEMENT À L'EXTÉRIEUR

CONDITIONS DE CODE ET D'APPROVISIONNEMENT: Ce gril doit être installé selon des codes et des ordonnances locaux, ou, en l'absence des codes locaux, avec l'un ou l'autre le plus défunt *Code national de gaz de carburant* (norme ANSI Z223.1/NFPA 54), et *Stockage de gaz naturel et de propane et manipulation du code d'installation* (CSA-B149.1).

Cet appareil et ses différents robinets d'isolement doivent être démontés du gaz-fournissent le système sifflant en examinant le système aux pressions au-dessus du ½ psig (kPa 3.5).

Cet appareil doit être isolé dans gaz-fournissent le système sifflant par fermeture que ses différents robinets d'isolement manuels pendant tous les essais sous pression du gaz-fournissent le système aux pressions jusques et y compris le ½ psig (kPa 3.5).

- Ce gril est pour ultilisation à l'extérieur seulement. Si l'appareil est entreposé à l'intérieur, enlever les bouteilles et les laisser à l'extérieur.
- Ne pas ranger le gril immédiatement aprés l'avoir utilisé. le laisser refroidir avant de le déplacer ou de la ranger. Le non respect de cette mesure de sécurité pourrait entraîner un incendie causant des dommages à la propriété, des blessures ou la mort.
- Ne pas utiliser cet appareil sous une surface combustible.
- Ne pas utiliser cet appareil sous un auvent. Le non respect de cette mesure de sécurité pourrait entraîner un incendie ou des blessures.
- Dégagement minimal entre les parois latérales et l'arriére de l'appareil et la construction combustible (45.7 cm à partir des parois latérales et 45.7cm à partir de l'arriére).
- Le régulareur de pression de gaz prévu avec cet appareil de cuisson à gaz pour l'extérieur doit être utilisé. Ce régulateur est réglé pour une pression de sortie de 5 pouces de colonne de l'eau pour le gaz naturel, et 10 pouces pour le propane.
- LE RÉGULATEUR INCLUS D'APPAREILS EST ÉVALUÉ POUR LE MAXIMUM DE 1/2 (LIVRES PAR POUCE CARRÉ). SI VOTRE OFFRE DE GAZ EST 1/2 PLUS GRAND QUE (LIVRES PAR POUCE CARRÉ), UN RÉGULATEUR ADDITIONNEL DOIT ÊTRE INSTALLÉ AVANT LE GRIL. VOIR LA SECTION DE CONDITIONS D'OFFRE DE GAZ POUR LA PRESSION APPROPRIÉE D'OFFRE DE GAZ.
- Ne couvrez jamais la surface entière de cuisine ou de gril de gauffreuses ou de casseroles. La surchauffe se produira et les brûleurs ne seront pas très performants quand la chaleur de combustion est emprisonnée au-dessous de la surface à cuire.
- Ne pulvérisez jamais l'eau sur une unité chaude de gaz, comme ceci peut endommager des composants de porcelaine ou de fer de fonte.
- Une fuite de GPL peut causer une incendie ou une explosion si enflammée entraînant des blessures corporelles graves ou la mort.
- Communiquez avec le fournisseur de GPL pour les réparations ou pour disposer de qules bouteille ou du GPL non utilisé.

⚠ AVERTISSEMENT:

1. Ne stockez pas ou n'employez pas l'essence ou d'autres vapeurs et liquides inflammables à proximité de ceci ou d'aucun autre appareil.
2. Un cylindre de propane non relié pour l'usage ne sera pas stocké à proximité de ceci ou d'aucun autre appareil.

⚠ AVERTISSEMENT:

L'installation inexacte, l'ajustement, le changement, le service, ou l'entretien peuvent causer des dommages ou des dégats matériels. Référez-vous à ce manuel. Pour de l'aide ou des renseignements supplémentaires, consultez un technicien professionnel qualifié de service, une agence de service ou le fournisseur de gaz.

Cet appareil est conçu comme un <u>appareil surveillé</u>. <u>NE laissez PAS</u> cet appareil brûler sans surveillance.

Toutes les sorties électriques à proximité du gril doivent être correctement fondues selon des codes locaux, ou en l'absence de local code, avec le code électrique national, ANSI/NFPA 70, ou le code électrique canadien, CSA C22.1, celui qui est applicable.

Maintenez tout électrique-fournissent des cordes et carburant-fournissent des tuyaux partis de n'importe quelle surface de chauffage.

Certifié à la norme ANSI : Z21.58 / CSA 1.6

INSTALLATEUR : Laissez ces instructions avec le consommateur.
CONSOMMATEUR : Maintenez pour la future référence.

CONTENTS

GETTING STARTED

INSTALLATION, OPERATION, AND SAFETY INFORMATION 4
ELECTRICAL CONNECTIONS 4
GAS SAFETY INFORMATION 5
WARNING 5
WHEN USING PROPANE GAS 5
WHEN USING NATURAL GAS 5
INSTALLATION SAFETY GUIDELINES 5
OPERATING THE UNIT SAFELY AND CORRECTLY . 5
SAFE USE & MAINTENANCE OF PROPANE GAS CYLINDERS 7
INSTALLATION REQUIREMENTS 8
OVERHEAD CONSTRUCTION AND EXHAUST HOOD REQUIREMENTS 8
REAR WALL CLEARANCES 9
SIDE WALL / CORNER WALL CLEARANCES (if applicable) 9
COMBUSTION AIR AND COOLING AIRFLOW 10
GAS-SUPPLY PLUMBING REQUIREMENTS 10
ELECTRICAL SAFETY 11
MODEL SPECIFICATIONS 12
PORTABLE GRIDDLE WIRING DIAGRAM 13
GRIDDLE REPLACEMENT PARTS LIST 14

INSTALLATION

INSTALLATION 16
LOCATION PREPARATION 16
WHEELS AND CASTERS 16
REMOVE PACKAGED CONTENTS AND GRIDDLE TOP 16
CONNECT THE GAS SUPPLY 17
LEAK TEST 18
LIGHTING TEST 18
REPLACE GRIDDLE TOP ASSEMBLY 18
INSTALL REAR EXHAUST PLATE 19
INSTALL THE DRIP COLLECTOR TROUGH 19
INSTALL THE DRIP TRAY 19

USE, CARE, & SERVICE

IDENTIFICATION OF GRIDDLE CONTROLS 20
USING THE GRIDDLE 21
LIGHTING (IGNITION) INSTRUCTIONS 23
ELECTRONIC LIGHTING 23
MANUAL LIGHTING 23
SHUTTING OFF THE UNIT 23
USING THE FOLDING SHELF 24
PAPER TOWEL HOLDER 24
REMOVING DRAWERS 24
SERVICING AND CLEANING 25
CLEANING YOUR GRIDDLE 25
GRIDDLE TOP REMOVAL 27
HEAT DISTRIBUTION GRID(S) REMOVAL 27
BURNER(S) REMOVAL 28
DRIP TRAY CHUTE REMOVAL 28
POWER SUPPLY FUSE REPLACEMENT 29
CONTROL PANEL REMOVAL 30
CONVERT GAS TYPE / CHECK BURNER ORIFICES .. 31
AIR SHUTTER ADJUSTMENT / BURNER FLAME INSPECTION 33
VALVE "LOW" SETTING ADJUSTMENT 34
TROUBLESHOOTING 35
WARRANTY 36

INSTALLATION, OPERATION, AND SAFETY INFORMATION

1. The outdoor appliance and surrounding area MUST remain clear of flammable substances such as gasoline, yard debris, wood, etc. Maintain a minimum horizontal clearance of 18" (in all directions) from combustible materials/items.
2. Do not block the 1" front air inlet along the bottom of the control panel. See the COMBUSTION AIR AND COOLING AIRFLOW section under INSTALLATION REQUIREMENTS for details.
3. **This unit must be installed so that the vent openings on the cabinet remain clear and free at all times. See the GAS SAFETY INFORMATION section.**
4. **When using propane gas: the propane cylinder, regulator, and rubber hose must be in a location not subject to temperatures above 125° F (51° C).**
5. The griddle lid must be removed before using unit.
6. The flames on each burner burn evenly along the entire burner with a steady flame (mostly blue). The unit has burner flame viewing cutouts to observe the burner flames (see IDENTIFICATION OF GRIDDLE CONTROLS section). If burner flames are not normal, check and clean the orifice and burner/venturi tubes for insects and insect nests. A clogged tube can lead to a fire beneath the unit. A proper flame pattern will ensure safe operation and optimal performance. Adjust the air shutter as needed (see AIR SHUTTER ADJUSTMENT/BURNER FLAME INSPECTION section).
7. The in-line gas valve or gas cylinder valve must always be shut OFF when the unit is not in use.
8. The drip collector trough holes and air baffle must be clear and unobstructed. Excessive grease deposits can result in a grease fire.
9. Whenever reconnecting any wires, apply a small amount of dielectric grease to the male connector, then make the connection. This will ensure conductivity and prevent moisture from affecting the contact.
10. Wear gloves and use extreme caution whenever installing and handling this product and its accessories as certain components have sharp edges that can cause personal injury.
11. **Adults MUST be present when this gas appliance is operating. This appliance MUST NOT be left burning when unattended.**

IMPORTANT

IN THE EVENT OF A GREASE FIRE, IMMEDIATELY SHUT OFF THE MAIN GAS VALVE TO THE UNIT. ALLOW THE FIRE TO EXTINGUISH ITSELF. KEEP AT A SAFE DISTANCE. A THOROUGH INSPECTION BY A QUALIFIED PROFESSIONAL SERVICE TECHNICIAN SHOULD BE CONDUCTED BEFORE FUTURE USE OF YOUR UNIT. THE SERVICE TECHNICIAN WILL CHECK THE SYSTEM FOR GAS LEAKS AND WILL CHECK ALL ELECTRICAL WIRING FOR DAMAGE. ALL GAS LEAKS AND WIRING MUST BE REPAIRED PRIOR TO FUTURE USE.

The unit serial number tag can be found affixed to the griddle body behind the control panel (on an aluminum tag) and on the underside of the drip tray handle (on a thermal label). It is recommended that the drip tray first be removed and cleaned / emptied of its contents, then turned over to view. The unit rating label is located inside of the control panel.

ELECTRICAL CONNECTIONS

A **120VAC (15 AMP minimum) GFCI GROUNDED 3-wire receptacle** (not included) is required within the vicinity of the unit to provide power to it. The GFCI receptacle must be a WEATHER-PROOF IN-USE COVERED RECEPTACLE.

- **Observe the National Electric Code and all local codes.**
- **Verify proper polarity of the receptacle.**
- **If an extension cord is used, ensure it is a 3-wire GROUNDED cord that is rated for the power of the equipment, and is approved for outdoor use with a W-A marking. DO NOT use 2-prong adapters.**
- **DO NOT TAMPER WITH THE EXTENSION CORD OR THE UNIT POWER-SUPPLY CORD.**

GAS SAFETY INFORMATION

WHEN OPERATING THIS GAS APPLIANCE, ALL INSTRUCTIONS AND WARNINGS MUST BE OBSERVED. FAILURE TO DO SO MAY RESULT IN A FIRE OR EXPLOSION CAUSING PROPERTY DAMAGE, BODILY INJURY, OR DEATH.

WARNING

This appliance MUST be installed and operated according to the information below.

FAILURE TO PROPERLY VENT THE GRIDDLE CABINET MAY RESULT IN A FIRE OR EXPLOSION CAUSING PROPERTY DAMAGE, BODILY INJURY, OR DEATH.

A leaking gas connection or valve unintentionally left open will create a hazard.

WHEN USING PROPANE GAS

- **Propane gas** (also known as **L.P. gas**) is heavier than air and will accumulate or pool in an inadequately vented enclosure or recessed area.
- If a pool of **propane gas** is ignited, an explosion will occur. Adequate venting at the floor level of the cabinet eliminates this danger.
- DO NOT store a spare propane-gas cylinder in or near the unit.

WHEN USING NATURAL GAS

- **Natural gas** is lighter than air and will accumulate at the top of an inadequately vented enclosure.
- If an accumulation of **natural gas** is ignited, an explosion will occur. Adequate venting at the top of the cabinet eliminates this danger.

INSTALLATION SAFETY GUIDELINES

THIS UNIT MUST BE INSTALLED SO THAT THE VENT OPENINGS ON THE CABINET REMAIN CLEAR AND FREE AT ALL TIMES.

The gas cylinder, regulator, and rubber hose must be in a location not subject to temperatures above 125° F (51° C).

IF A PROPANE CYLINDER IS INSTALLED INSIDE OF THE CABINET, THE GUIDELINES FOUND IN THE **SAFE USE & MAINTENANCE OF PROPANE GAS CYLINDERS** SECTION MUST BE FOLLOWED.

OPERATING THE UNIT SAFELY AND CORRECTLY

Every time you use the unit, **make sure that:**

1. The area around the unit is clear and free from combustible materials, gasoline and flammable vapors/liquids.
2. There is no blockage of the airflow through the vent openings located on the cabinet.
3. The hose is inspected (if applicable). See SAFE USE & MAINTENANCE OF PROPANE-GAS CYLINDERS section.

DO NOT store any combustible materials, gasoline, and any other flammable vapors/liquids in the vicinity of the unit. Provide adequate clearance for servicing and operation.

UTILISATION SÛRE ET ENTRETIEN DES CYLINDRES DE GAZ DE PROPANE

IMPORTANT POUR VOTRE SÛRETÉ

LISEZ ET SUIVEZ TOUS LES AVERTISSEMENTS ÉQUIPÉS DE VOTRE CYLINDRE DE GAZ DE PROPANE.

En actionnant cet appareil avec un cylindre de gaz de propane ON DOIT observer ces instructions et avertissements.

LE MANQUE DE FAIRE AINSI PEUT AVOIR COMME CONSÉQUENCE UNE INCENDIE OU UNE EXPLOSION SÉRIEUSE.

CYLINDRE ET CONDITIONS ET CARACTÉRISTIQUES DE CONNECTEUR

a. Les bouteilles, les vannes et les tuyaux de propane doivent être entretenus et inspectés avant chaque utilisation. Ils doivent être remplacés en cas de dommages visibles. Si le tuyau est coupé ou présente des signes d'abrasion ou d'usure, il doit être remplacé avant utilisation (**voir e.**).

b. Cette unité, lorsqu'elle est utilisée avec une bouteille, doit être connectée à une bouteille standard de gaz propane de 5 gallons (20 lb) équipée d'un dispositif anti-débordement répertorié. L'appareil est obligatoire sur toutes les bouteilles vendues depuis le 1er octobre 1998 afin d'empêcher tout remplissage excessif.

c. Les dimensions du cylindre doivent être d'environ 12 "(30,5 cm) de diamètre et 18" (45,7 cm) de hauteur. Les bouteilles doivent être construites et marquées conformément aux spécifications du ministère des Transports (DOT) pour les bouteilles à gaz LP ou à la norme relative aux bouteilles, sphères et tubes pour le transport des marchandises dangereuses et à la Commission, CAN / CSA-B339, selon le cas.

d. Le cylindre doit inclure un collier pour protéger la valve de cylindre et le circuit d'alimentation de cylindre doit être assuré le retrait de vapeur.

e. Le montage du régulateur de pression et le flexible (Fig. 6-1) fourni avec cet appareil au gaz en plein air (modèles au propane seulement) doit être utilisé. Assemblées d'origine et régulateur de pression et le tuyau de remplacement doivent être ceux spécifiés par le fabricant pour le raccordement d'un dispositif de cylindre de liaison identifiée comme de type I par le ANSI Z 21.58/CGA 1.6 (voir liste des pièces pour les informations de commande).

f. La valve de cylindre de gaz de propane doit être équipée d'un dispositif d'accouplement de raccordement de cylindre, décrit comme type I dans la norme définie dans le e. de paragraphe ci-dessus. Ce dispositif est généralement décrit comme coupleur de fil de point culminant.

g. Si votre cylindre de gaz de propane vient avec une prise de la poussière, placez le bouchon anti-poussière sur la sortie de valve de cylindre toutes les fois que le cylindre n'est pas en service.

OPÉRATION DE COUPLEUR

Pour relier le regulator/hose à l'ajustage de précision de valve de cylindre de gaz de propane: Serrez l'écrou de main sur le régulateur au-dessus de l'ajustage de précision de fil de point culminant sur la valve de cylindre. Tournez l'écrou de main dans le sens des aiguilles d'une montre pour engager les fils et pour serrer jusqu'à ce que douillettement. L'utilisation des pinces ou de la clé ne devrait pas être nécessaire. Seulement le propane marqué par cylindres doit être employé.

Pour débrancher: Tournez l'écrou de main dans le sens contraire des aiguilles d'une montre jusqu'à isolé (fig. 6-1).

Important: Avant d'employer le unité, et ensuite chaque fois que le cylindre est enlevé et rattaché, examinez tous les raccordements pour déceler les fuites. Arrêtez les valves de unité et ouvrez la valve principale de cylindre, puis vérifiez les raccordements avec de l'eau savonneux. Réparez toutes les fuites avant d'allumer le unité.

ATTENTION: Tournez toujours la valve principale de cylindre de propane au loin après chaque utilisation, et avant de déplacer le unité et le cylindre, ou débrancher l'accouplement. Cette valve doit rester fermée et le cylindre a débranché alors que l'appareil n'est pas en service, quoique l'écoulement de gaz soit arrêté par un dispositif de sûreté quand le coupleur est débranché.

Inspectez soigneusement l'ensemble de tuyau chaque fois avant que le gaz soit allumé. Un tuyau fissuré ou effiloché doit être immédiatement remplacé.

Si l'appareil est stocké à l'intérieur, le cylindre doit être disconnected et a enlevé. Des cylindres Disconnected doivent être stockés dehors, hors de la portée des enfants, avec les prises de valve filetées étroitement installées, et ne doivent pas être stockés dans un bâtiment, le garage, ou n'importe quel autre secteur inclus.

POUR VOTRE SÛRETÉ

a. Ne stockez pas un cylindre de gaz disponible de propane dessous ou ne vous approchez pas de cet appareil.

b. Ne remplissez jamais cylindre au delà de 80 pour cent de plein.

c. SI L'INFORMATION DANS "A" ET "B" N'EST PAS SUIVIE EXACTEMENT, UN FEU CAUSANT LA MORT OU DES DOMMAGES SÉRIEUX PEUT SE PRODUIRE.

Fig. 6-1 type coupleur de fil de point culminant d'l

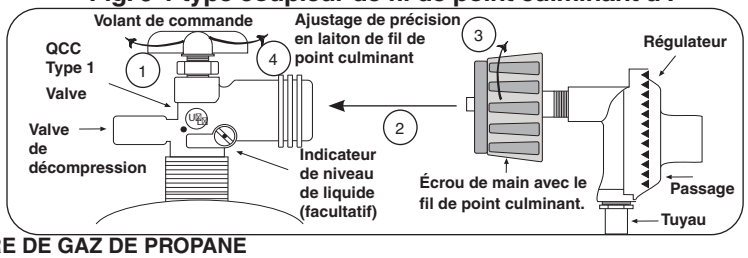

FIXATION DU CYLINDRE DE GAZ DE PROPANE

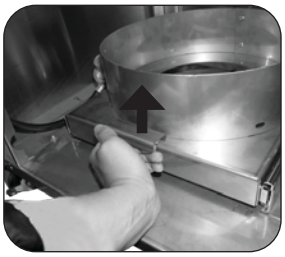

Fig. 6-2

1. Soulevez la poignée de verrouillage pour ouvrir le plateau et pour tirer à l'extérieur.

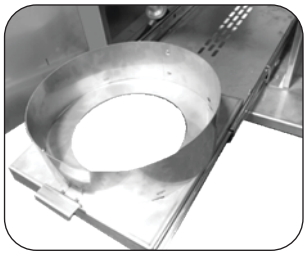

Fig. 6-3

2. Placez le cylindre de gaz de propane gainent fermement sur le plateau avec la base insérée dans le trou central et le collier s'ouvrant au dos. Suivez les instructions de relier ci-dessus l'approvisionnement.

Fig. 6-4

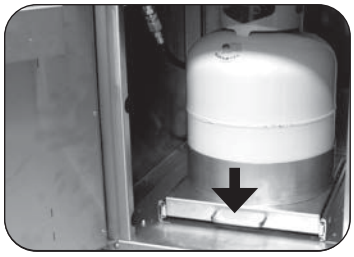

Fig. 6-5

3. Avec le cylindre de gaz en place et relié, glissez le plateau de nouveau dans la poignée de verrouillage de chariot et de serrure en poussant fermement en bas.

SAFE USE & MAINTENANCE OF PROPANE GAS CYLINDERS

IMPORTANT FOR YOUR SAFETY

READ AND FOLLOW ALL WARNINGS PROVIDED WITH THE PROPANE-GAS CYLINDER.

When operating this appliance with a propane-gas cylinder, these instructions and warnings **MUST** be observed.

FAILURE TO DO SO MAY RESULT IN A SERIOUS FIRE OR EXPLOSION.

CYLINDER/CONNECTOR REQUIREMENTS

a. Propane-gas cylinders, valves, and hoses must be maintained in good condition and inspected before each use of appliance. They must be replaced if there is any visible damage. If hose is cut or shows excessive abrasion or wear, it must be replaced before using appliance (see **e**.).

b. This unit, when used with a cylinder, should be connected to a standard 5-gallon (20 lb.) propane-gas cylinder equipped with a listed overfilling prevention device. The device has been required on all cylinders sold since October 1,1998, to prevent overfilling.

c. Cylinder dimensions should be approximately 12" (30.5 cm) in diameter and 18" (45.7 cm) high. Cylinders must be constructed and marked in accordance with the U.S. Department of Transportation (D.O.T.) *Specifications for LP-Gas Cylinders,* or the Standard for *Cylinders, Spheres, and Tubes for Transportation of Dangerous Goods and Commission,* CAN/CSA-B339, as applicable.

d. The cylinder used must include a collar to protect the cylinder valve, and the cylinder supply system must be arranged for vapor withdrawal.

e. The pressure regulator and hose assembly (Fig. 7-1) *supplied* with this outdoor gas appliance (L.P. models only) must be used. Original and replacement pressure regulator and hose assemblies must be those specified by the manufacturer for connection with a cylinder connecting device identified as Type I by the *ANSI Z 21.58/CGA 1.6* (see PARTS LIST for ordering information).

f. The propane-gas cylinder valve must be equipped with a cylinder connection device, described as Type I in the standard defined in paragraph **e**. above. This device is commonly described as an Acme thread coupler.

g. If the propane-gas cylinder comes with a dust plug, place the dust cap on the cylinder valve outlet whenever the cylinder is not in use.

COUPLER OPERATION

To connect the regulator/hose assembly to the propane-gas cylinder valve fitting: Press the hand nut on the regulator over the Acme thread fitting on the cylinder valve. Turn the hand nut clockwise to engage the threads and tighten until snug. The use of pliers or a wrench should not be necessary. Only cylinders marked “propane” may be used.

To disconnect: Turn the hand nut counterclockwise until detached (Fig. 7-1).

Important: Before using the unit, and after each time the cylinder is removed and reattached, check the hose for wear (see **a**.) and check all connections for leaks. Turn off the unit valves and open the main cylinder valve, then check connections with soapy water. Repair any leaks before lighting the unit.

CAUTION: Always turn the propane cylinder main valve off after each use, and before moving the unit and cylinder or disconnecting the coupling. This valve must remain closed and the cylinder disconnected while the appliance is not in use, even though the gas flow is stopped by a safety feature when the coupler is disconnected.

Carefully inspect the hose assembly each time before the gas is turned on. A cracked or frayed hose must be replaced immediately.

If the appliance is stored indoors, the cylinder must be disconnected and removed. Disconnected cylinders must be stored outdoors, out of the reach of children, with threaded valve plugs tightly installed, and must not be stored in a building, garage, or any other enclosed area.

FOR YOUR SAFETY

a. DO NOT store a spare propane-gas cylinder under or near this appliance.

b. NEVER fill the cylinder beyond 80-percent full.

c. IF THE INFORMATION IN **a.** AND **b.** IS NOT FOLLOWED EXACTLY, A FIRE CAUSING DEATH OR SERIOUS INJURY MAY OCCUR.

Fig. 7-1 Type I Acme thread coupler

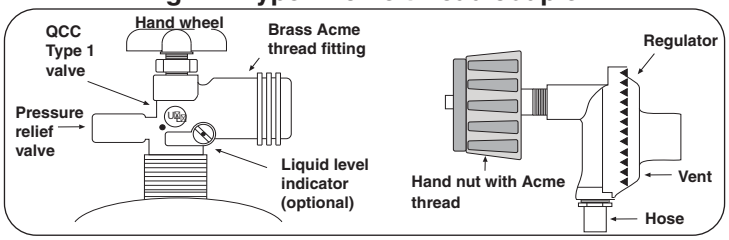

SECURING THE PROPANE-GAS CYLINDER

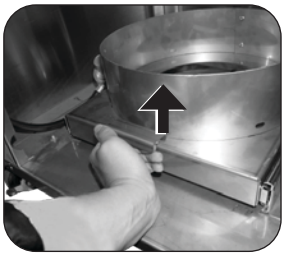

Fig. 7-2

1. Lift latch handle to unlock tray and pull outward.

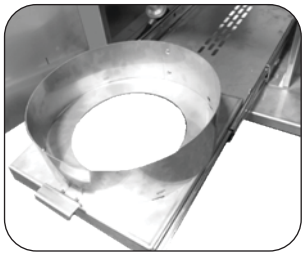

Fig. 7-3

2. Set propane-gas cylinder into the sleeve of the extended tray with base inserted into center hole and collar opening to back. Follow instructions above to connect supply.

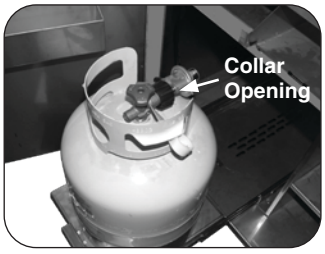

Fig. 7-4

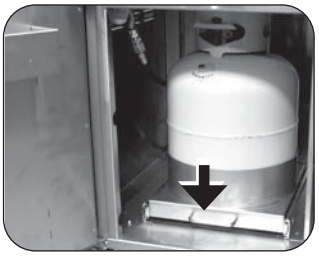

Fig. 7-5

3. With gas cylinder in place and connected, slide tray back into cart and lock latch handle by pushing firmly downward.

Installation must be performed by a qualified professional service technician.

This unit is designed for outdoor use only. **DO NOT** use this unit inside a building, garage, or enclosed area. **DO NOT** use this unit in or on a recreational vehicle or boat.

OVERHEAD CONSTRUCTION AND EXHAUST HOOD REQUIREMENTS

A minimum 5 foot clearance is required between the cooking surface and the overhead construction.

When installed under combustible overhead construction, the area above the cooking surface of the unit **must** be covered with an exhaust hood. The exhaust hood provides the protection for the combustible overhead construction. See exhaust hood information below and Fig. 8-1.

Important: **DO NOT** use this appliance under **unprotected** combustible overhead construction.

When installed under overhead non-combustible construction, an exhaust hood is highly recommended; see exhaust hood information below and Fig. 8-1.

Exhaust Hood

When using an exhaust hood, the area above the cooking surface of the griddle must be covered with a hood larger than the cooking area of the griddle, and with a minimum of 1200 CFM (cubic feet per minute) rated exhaust fan for proper outdoor application.

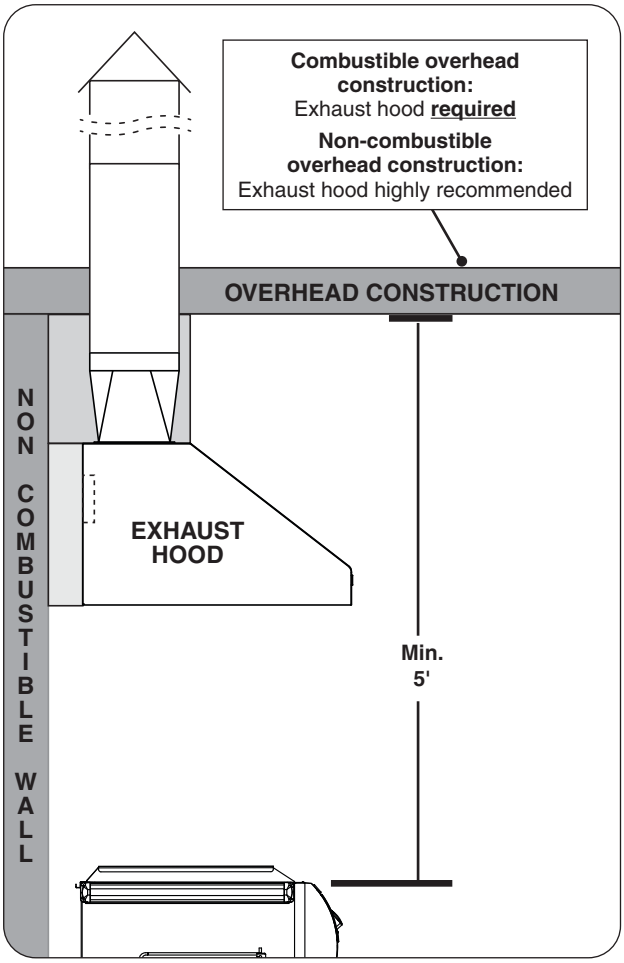

Fig. 8-1 Overhead requirements

REAR WALL CLEARANCES

For the minimum clearances between the unit and rear walls, your setup must fall within one (or more) of the following:

A. Clearance between unit and strictly non-combustible rear wall

(*i.e. brick wall, see Fig. 9-1*)

- The unit must have a minimum clearance of 4" from the non-combustible rear wall.

  (To allow for proper ventilation and prevent dangerous overheating.)

B. Clearance between unit and a protected combustible rear wall

(i.e. a non-combustible wall in front of a combustible wall to serve as a barrier. This can be accomplished by brick, or a metal stud finished with non-combustible substrate, see Fig. 9-2)

- The unit must have a minimum clearance of 14" from the protected combustible rear wall.

  (The 4" non-combustible material plus an additional 10" clearance between the unit and protected rear wall.)

C. Clearance between unit and combustible rear wall

- The unit must have a minimum clearance of 18" from the combustible rear wall (see Fig. 9-3).

SIDE WALL / CORNER WALL CLEARANCES (if applicable)

The unit must have a minimum clearance of 24" from any side walls (to account for variables in airflow that could affect performance). See Fig. 9-4.

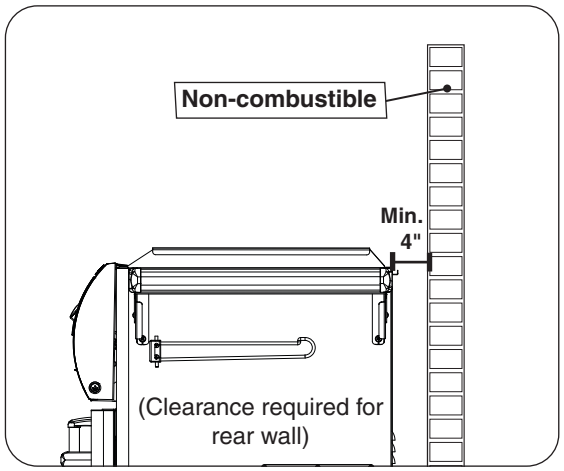

Fig. 9-1 Clearance '**A**' Diagram

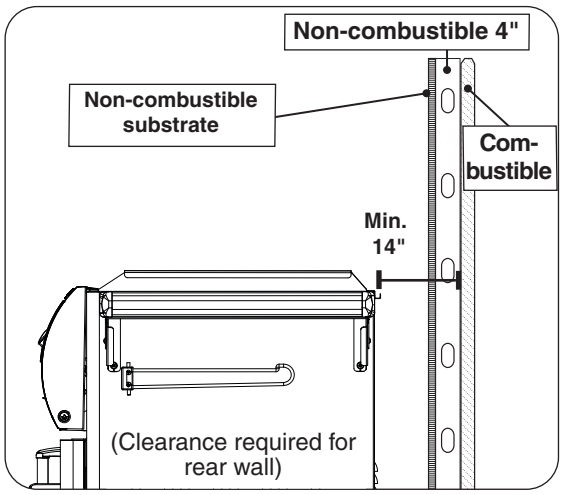

Fig. 9-2 Clearance '**B**' Diagram

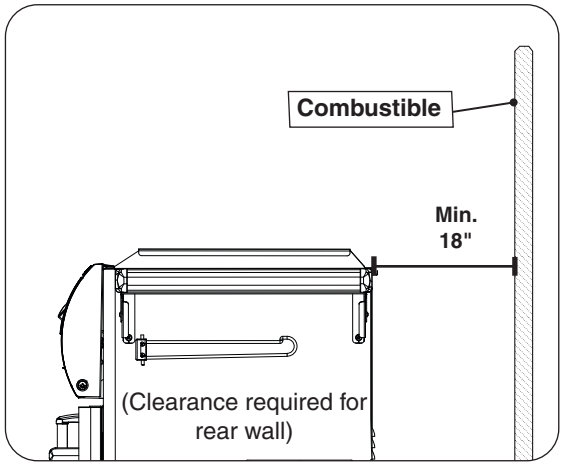

Fig. 9-3 Clearance '**C**' Diagram

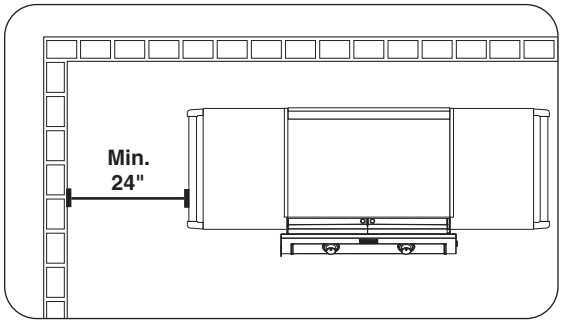

Fig. 9-4 Side/corner wall clearance

The control panel MUST remain removable for servicing (see CONTROL PANEL REMOVAL section).

COMBUSTION AIR AND COOLING AIRFLOW

Proper airflow (front-to-back, Fig. 10-1) MUST be maintained for the unit to perform as it was designed. If airflow is blocked, overheating and poor combustion will result. Do not block the 1" front air inlet along the bottom of the control panel.

CAUTION: Wind blowing into or across the rear vent (Fig. 10-3) can cause poor performance and/or dangerous overheating. Orient the griddle so that the prevailing wind blows toward the front of the griddle (Fig. 10-2).

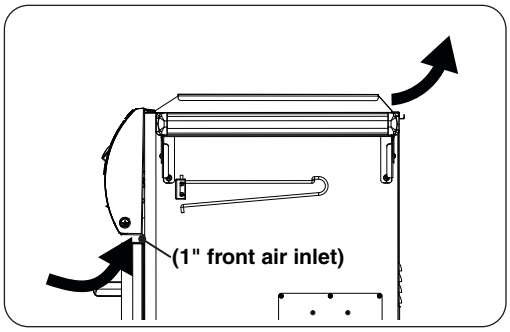

Fig. 10-1 Airflow diagram

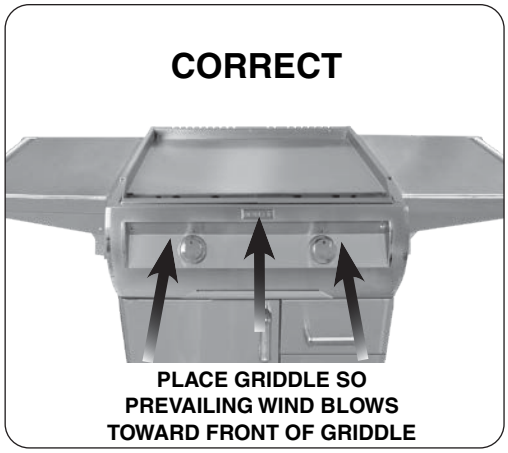

Fig. 10-2 Airflow direction - CORRECT

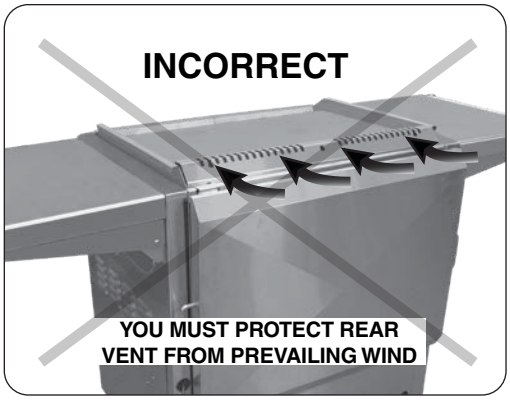

Fig. 10-3 Airflow direction - INCORRECT

GAS-SUPPLY PLUMBING REQUIREMENTS

The gas supply is to be brought up near/behind the unit. Your individual installation may vary. **Observe the National Fuel Gas Code and all local codes. Leak test at all connections.**

The gas supply must be sized to provide minimum inlet pressure at the maximum flow rate (BTU/hr). Undue pressure loss will occur if the pipe is too small, or the run is too long. Gas supply pipe must be ½" minimum interior diameter. If the gas line is longer than 20', a larger diameter line may be necessary. Refer to the NFPA 54 guidelines for further details.

Any rigid pipe gas line MUST stop outside of and near the unit. It CANNOT be routed inside the cabinet of the unit. For natural gas models, a quick disconnect hose is included and pre-installed to the valve manifold, and routes out of the cabinet. For household propane, an appropriate, C.S.A. approved, flexible hose or similar MUST be purchased to route from the unit valve manifold out to the gas line. The R.H.P. quick disconnect hose is recommended, and is discussed and illustrated in this manual (see INSTALLATION and PARTS LIST sections). Contact your dealer for ordering information. (If your household propane setup varies from what is shown, **observe the National Fuel Gas Code and all local codes.**)

Use a pipe joint compound resistant to all gasses on all NPT pipe fittings. Make sure to tighten every fitting securely. **Do not use pipe joint compound to connect flare fittings.**

Important: **A shut-off valve (not included) in the gas supply line is required.** It provides for safety when the unit is not in use and for convenient maintenance and repair. It must be installed within 6 feet of the unit and must be easily accessible. Use a pipe joint compound resistant to all gasses on all NPT pipe fittings **except flare fittings**.

GAS SUPPLY AND MANIFOLD PRESSURES:
For **natural gas** - normal 7" water column (w.c.), minimum 5", maximum 10 $^1/_2$". For **propane gas** - normal 11" w.c., minimum 10", maximum 13".

Note: An additional regulator may be needed to meet these requirements.

ELECTRICAL SAFETY

- To protect against electric shock, do not immerse cord or plugs in water or other liquid.
- Unplug from the outlet when not in use and before cleaning. Allow to cool before putting on or taking off parts.
- Do not operate any outdoor cooking gas appliance with a damaged cord, plug, or after the appliance malfunctions or has been damaged in any manner. Contact the manufacturer for repair.
- Do not let the cord hang over the edge of a table or touch hot surfaces.
- Do not use an outdoor cooking gas appliance for purposes other than intended.
- When connecting, first connect plug to the outdoor cooking gas appliance then plug appliance into the outlet.
- **Use only a properly wired and inspected 120VAC (15 AMP minimum) Ground Fault Circuit Interrupter (GFCI) GROUNDED 3-wire receptacle with this outdoor cooking gas appliance.**
- The GFCI receptacle must be a WEATHER-PROOF IN-USE COVERED RECEPTACLE.
- Never remove the grounding plug or use with an adapter of 2 prongs.
- Use only extension cords with a 3 prong grounding plug, rated for the power of the equipment, and approved for outdoor use with a W-A marking.
- **The provisions of the National Electric Code as well as any local codes must be observed when installing the product.**

MODEL SPECIFICATIONS

		E660s Griddle
Main burner	Quantity	2
	N/P orifice drill size	#44 / #55
	N/P air shutter opening *	1/4" / 1/4"
Nat to LP conversion kit model #		24336-21
Input electrical requirements		120VAC / 15 AMP minimum / 60 Hz / GFCI outlet
Appliance rating		12VAC / 60 Watts
Power supply fuse model # / fuse type		24-B-57 / T6.3AL (250V)

* These are air shutter factory settings. These settings may require adjustment due to gas conversion, altitude, or other local conditions. See AIR SHUTTER ADJUSTMENT / BURNER FLAME INSPECTION section.

Table 1 - Product Specifications

Model	Height			Width			Depth	
	Floor to top		Floor to top of shelf (C)	Left to right			Front to back	
	With lid (A)	Without lid (B)		Cart base (D)	(with shelves) Up (E)	(with shelves) Down (F)	Cart base (G)	Maximum outer (H)
E660s Griddle	39"	38 1/2"	37"	34 1/4"	73 1/2"	44 1/4"	26"	32"

Table 2 - Griddle Dimensions

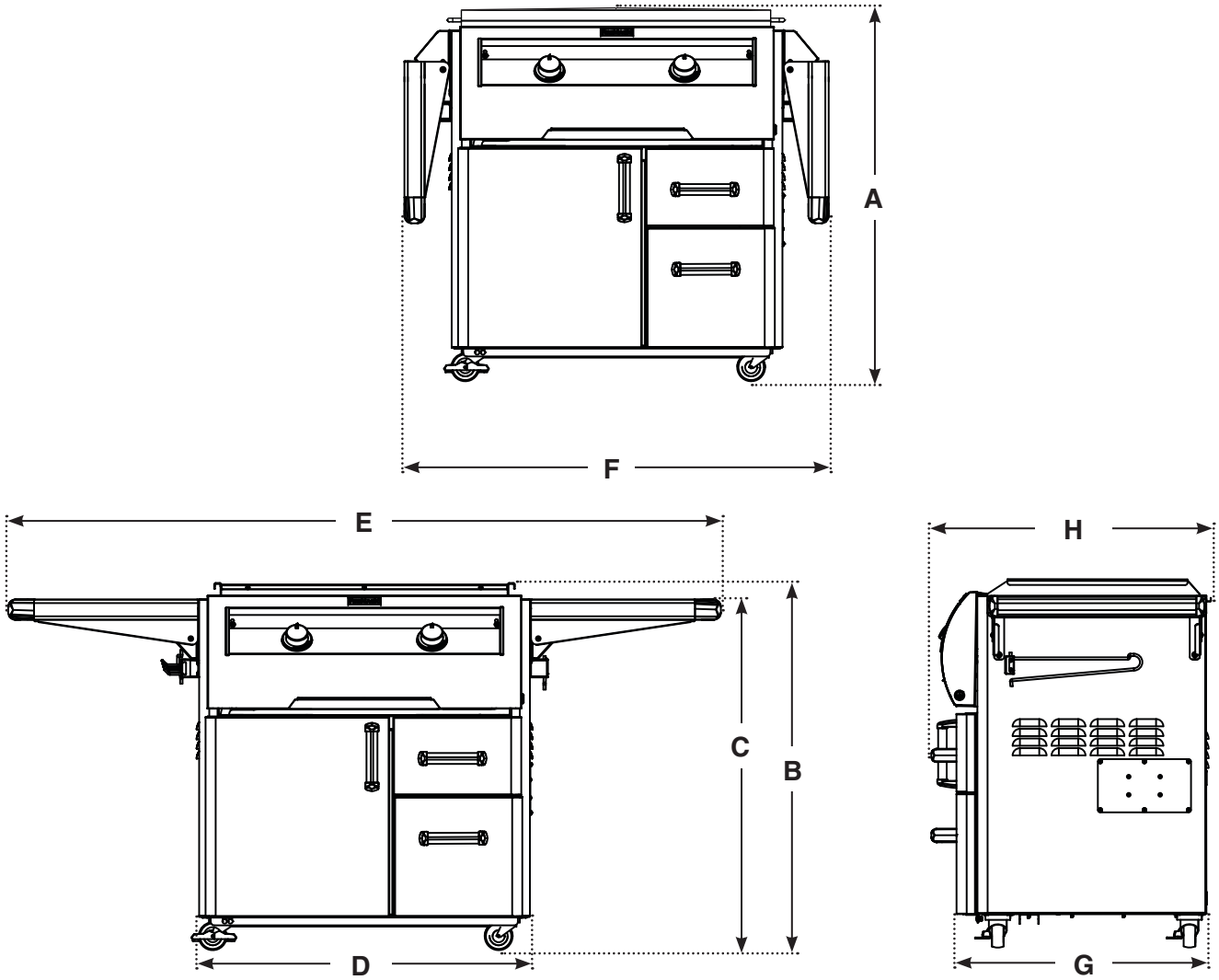

PORTABLE GRIDDLE WIRING DIAGRAM

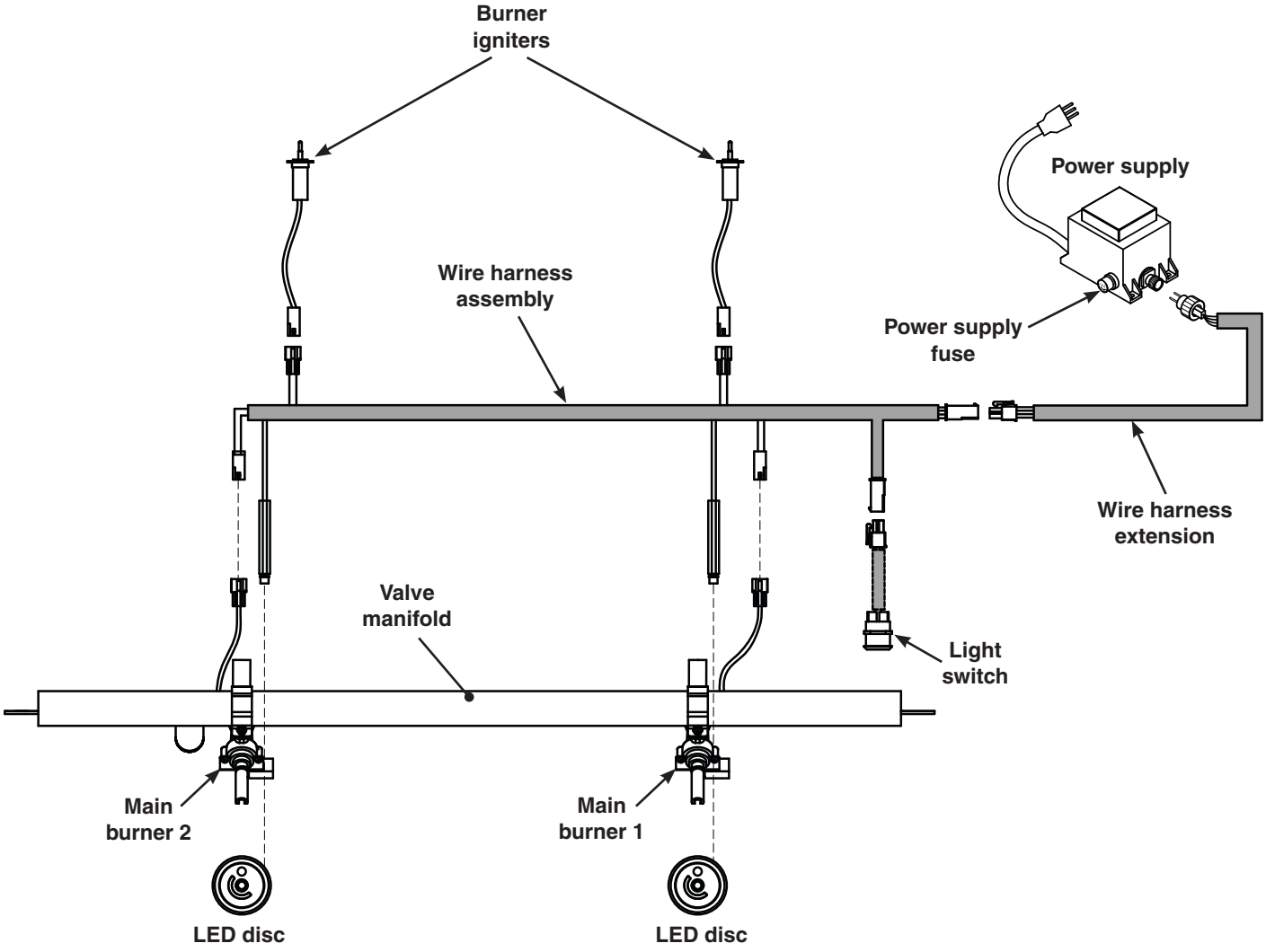

Note: In addition, a wire diagram can be found affixed to the inside of the control panel.

GRIDDLE REPLACEMENT PARTS LIST

IMPORTANT

Remove all packing material (including any protective coatings) and discard prior to use.

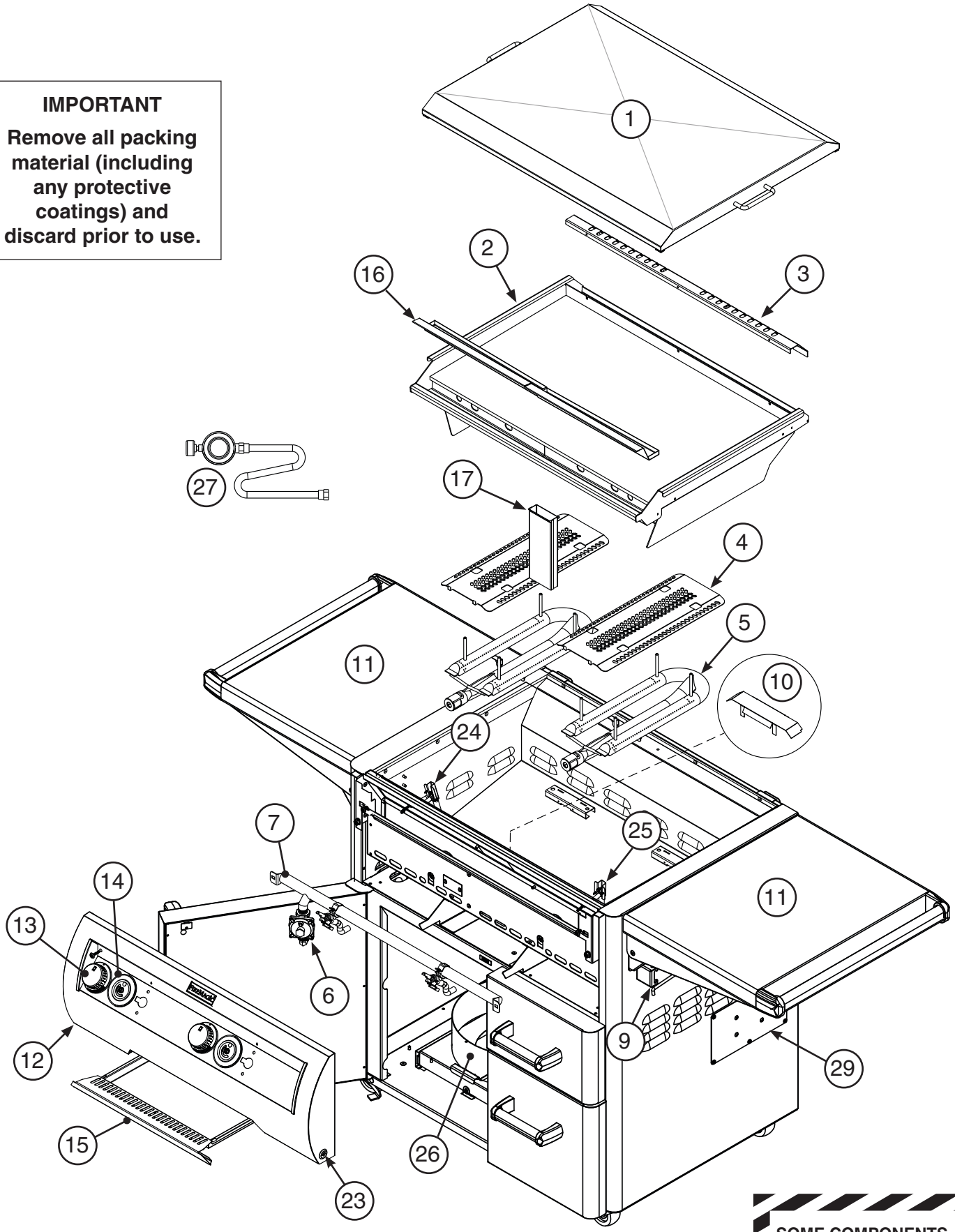

Fig. 14-1

To order replacement parts, contact your local Fire Magic® dealer.

SOME COMPONENTS ARE HEAVY

HANDLE WITH CARE

GRIDDLE REPLACEMENT PARTS LIST (cont.)

Item	Description	E660s Griddle Part No.	Qty.
1.	Griddle lid	3655	1
2.	Griddle top assembly	24194-50	1
3.	Rear exhaust plate	24194-55	1
4.	Heat distribution grid (set of 2)	3057-S-2	1
5.	Main burner	3041-60	2
6.	Convertible regulator	PR-4	1
7.	Valve manifold	24194-51	1
8.	Tool holder *	25387-12	1
9.	Paper towel holder	25387-11	1
10.	Air baffle	24194-41	1
11.	Folding shelf	24336-18	2
12.	Control panel w/ raceway and wire harness	24194-57	1
13.	Control knob	24182-71	2
14.	LED disk	24182-63	2
15.	Drip tray	24194-58	1
16.	Drip collector trough (left and right)	24194-53	1
17.	Drip tray chute	24194-54	1
18.	Wire harness w/ raceway *	24182-73	1
19.	Wire harness extension *	24182-74	1
20.	Main burner electrode *	3199-72	2
21.	Natural gas orifice *	3001-44-1	2
22.	Propane gas orifice *	3001-55-1	2
23.	Light switch	24182-48	1
24.	Lighting tube (left)	24182-75	1
25.	Lighting tube (right)	24182-76	1
26.	Propane tank tray (propane models only)	24336-36	1
27.	Propane regulator with hose (propane models only)	5110-07	1
28.	Quick-disconnect hose (natural models only) *	5110-03	1
29.	Power supply	24187-64	1
30.	Power supply fuse *	24-B-57	1

* Not shown

LOCATION PREPARATION

Prepare a flat, level surface capable of supporting the weight of the unit and convenient to the gas supply if connecting to a gas line.

WHEELS AND CASTERS

To lock a caster press down on the side of the lever with the word "ON" stamped on it until it stops and the caster will not turn. To unlock, press down on the side stamped "OFF."

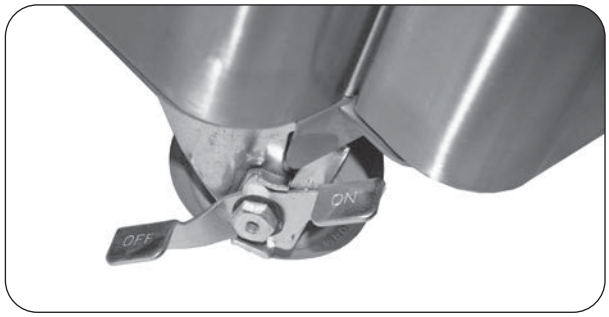

Fig. 16-1 Lock/unlock wheels

REMOVE PACKAGED CONTENTS AND GRIDDLE TOP

1. Remove all contents from the box.

CAUTION: THE UNIT IS HEAVY AND REQUIRES TWO PEOPLE FOR SAFE HANDLING.

2. Remove the griddle top by lifting the griddle upward and out from the main frame. Carefully rest on a sturdy surface.

Note: Lift the griddle top from the left and right raised walls. See Fig. 16-2.

CAUTION: THE GRIDDLE TOP IS HEAVY.

3. Remove all packaged contents within the unit and set aside for later installation.

Note: DO NOT RE-INSTALL THE GRIDDLE TOP AT THIS POINT.

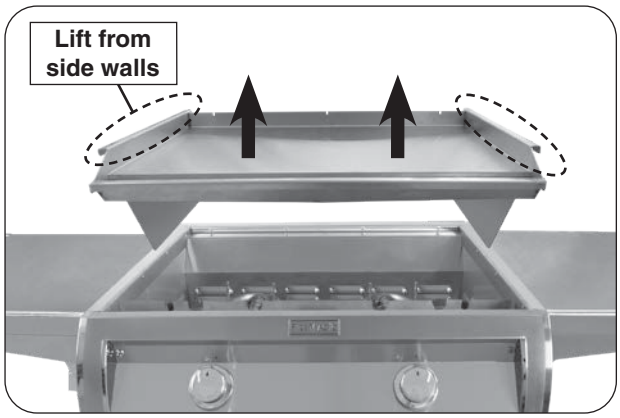

Fig. 16-2 Remove griddle top

INSTALL THE TOOL HOLDER AND PAPERTOWEL HOLDER

The rectangular mounting bracket for the tool holder and the paper towel holder come pre-attached to the sides of the cart.

Unpack the holder portion, squeeze the open ends together slightly, and install them into the mounting bracket (see Fig. 16-3). Next, release the hanger so that the ends extend out through the holes in the top and bottom of the mounting bracket (Fig. 16-4, 16-5).

When not in use, the racks may be folded back against the wall of the cabinet (Fig. 16-4, 16-5).

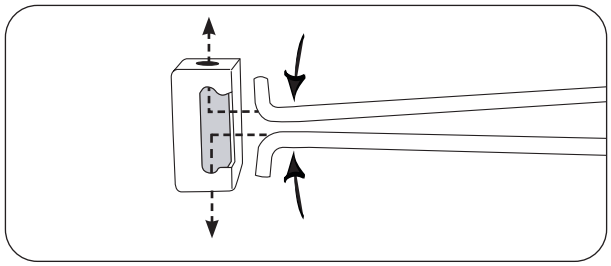

Fig. 16-3 Install tool holder / papertowel holder

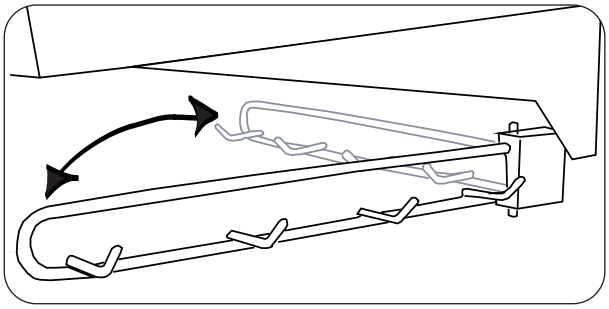

Fig. 16-4 Tool holder detail

Installation continued on following page

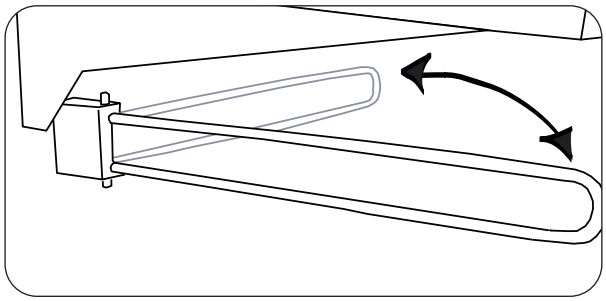

Fig. 16-5 Papertowel holder detail

CONNECT THE GAS SUPPLY

To Connect To Propane Cylinder:

Read the safety warnings and follow the instructions in the section SAFE USE AND MAINTENANCE OF PROPANE GAS CYLINDERS.

To Connect To Natural Or Household Propane Gas Supply:

- Before connecting the gas supply to your appliance, pressures MUST be tested and MUST NOT exceed 10.5" w.c. for Nat. gas and 13" w.c. for L.P. gas. An additional regulator may be required.
- Refer to the GAS SUPPLY PLUMBING REQUIREMENTS section for all details on the gas supply and its setup.
- For natural gas models, a quick disconnect hose is included and pre-installed to the unit valve manifold. For household propane, an appropriate, C.S.A. approved, flexible hose or similar MUST be purchased to route from the unit valve manifold out to the gas line. The R.H.P. quick disconnect hose is recommended, and is discussed and illustrated here. See PARTS LIST and contact your dealer for ordering information. (If your setup varies from what is shown here, **observe the National Fuel Gas Code and all local codes.)**

1. **Turn OFF gas supply at the source.**
2. **Household propane only:** A regulator hose assembly designed for L.P. cylinders comes pre-installed to the unit valve manifold. First remove this assembly from the flare adapter (at end of manifold), and then install a quick disconnect hose or similar (purchased separately) to the adapter. (An R.H.P. quick disconnect hose is recommended - see third bullet above.) Use a pipe joint compound resistant to all gasses on all NPT pipe fittings **except flare fittings**. Reference Fig. 17-1. Then proceed to step 3.
3. Route the quick disconnect hose (or similar) out of the hole in the rear bottom right of the cabinet, and to the gas supply (see Fig. 17-1).

Note: For quick disconnect hoses, the quick disconnect female socket will first need to be detached to allow the hose to feed through the hole.

4. A shut-off valve is required within 6 feet of the unit and must be easily accessible.

   Connect the quick disconnect female socket to the shut-off valve OR gas supply (NPT) using a pipe joint compound resistant to all gasses (see Fig. 17-2). Tighten securely. Re-attach the hose to the disconnect female socket.

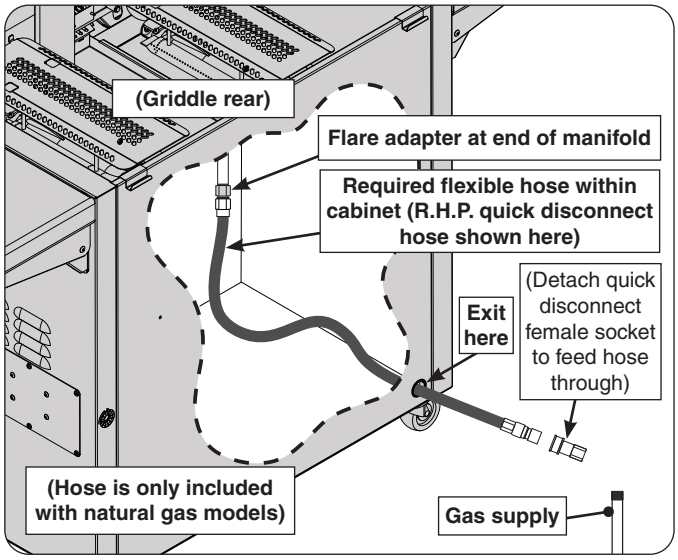

Fig. 17-1 Flexible hose assembly detail

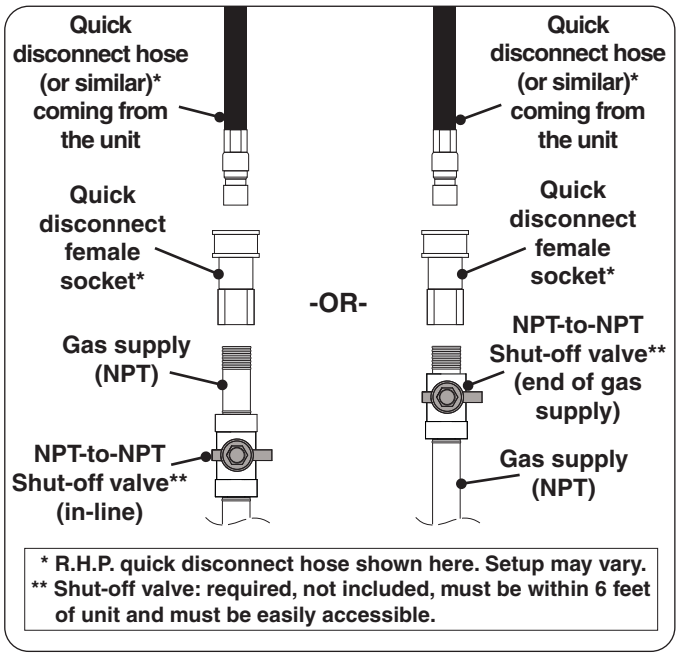

Fig. 17-2 Connecting to a gas line

LEAK TEST

Turn all burner valves to the **OFF** position. Turn on the gas supply, and test at all connections for leaks using a soapy water solution. If bubbles appear, a leak is present. Turn off the gas and tighten at all connections. Repeat until no leaks are present. If a leak persists, turn off the gas supply and contact the local gas company or dealer. **NEVER USE A FLAME TO CHECK FOR LEAKS.**

Once the leak test is complete, turn off the gas supply and proceed.

LIGHTING TEST

Prior to proceeding with installation, perform a lighting test.

1. Ensure the interior of the griddle is free of any packaging/ plastic material.
2. Test each burner (see the LIGHTING INSTRUCTIONS section for lighting your burners).

Note: At this point of installation the power is not connected, so manual lighting (with a match or lighter) is required.

3. Refer to the AIR SHUTTER ADJUSTMENT section to determine if the burners require air shutter adjustments.
4. **Allow the unit to completely cool after testing.**

REPLACE GRIDDLE TOP ASSEMBLY

1. Carefully place the griddle top back onto the main frame.

Note: Lift the griddle top from the left and right raised walls (see Fig. 18-1).

CAUTION: THE GRIDDLE TOP IS HEAVY AND REQUIRES TWO PEOPLE FOR SAFE HANDLING.

2. Secure the griddle top by fastening the provided screw into the screw hole located on the rear of the griddle top (see Fig. 18-2).

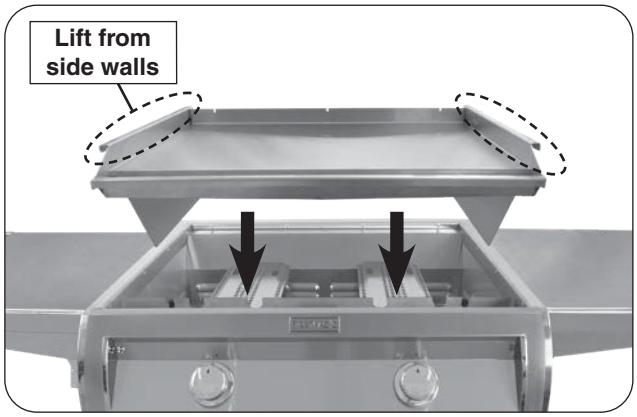

Fig. 18-1 Replace griddle top

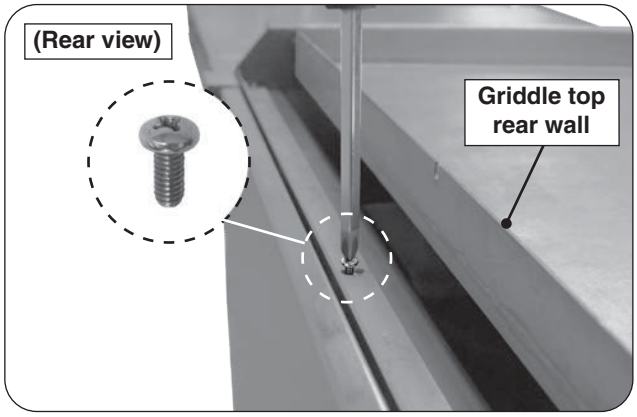

Fig. 18-2 Secure griddle top

INSTALL REAR EXHAUST PLATE

1. Assemble the provided bolts and nuts (loosely) to the three holes on the rear exhaust plate as shown in Fig. 19-1, A.
2. Align the exhaust plate with the three cutouts on the griddle rear wall and fasten (see Fig. 19-1, B).

INSTALL THE DRIP COLLECTOR TROUGH

1. Place the left piece inside the griddle drip reservoir and completely slide it to the left side (see Fig. 19-2,A).
2. Place the right piece and ensure it overlaps the left tray as shown in Fig. 19-2, B.

INSTALL THE DRIP TRAY

Carefully align the drip tray to the opening found on the bottom front of the control panel and fully insert (see Fig. 19-3).

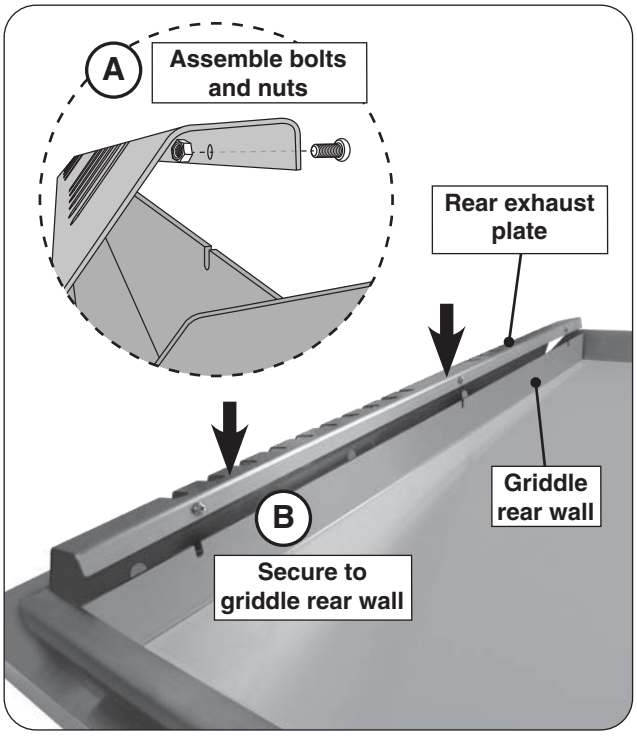

Fig. 19-1 Install rear exhaust plate

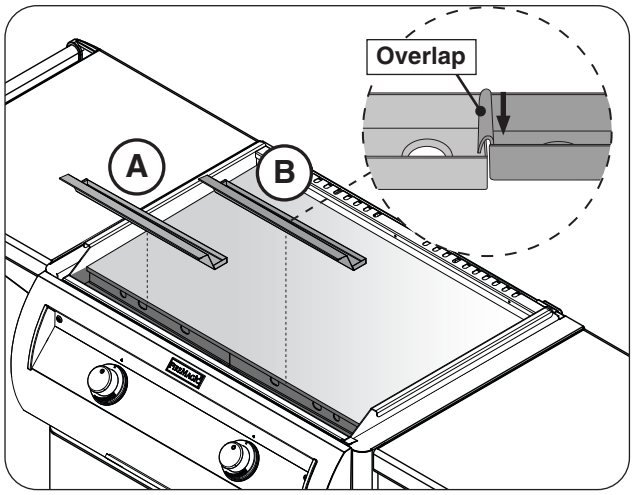

Fig. 19-2 Install drip collector trough

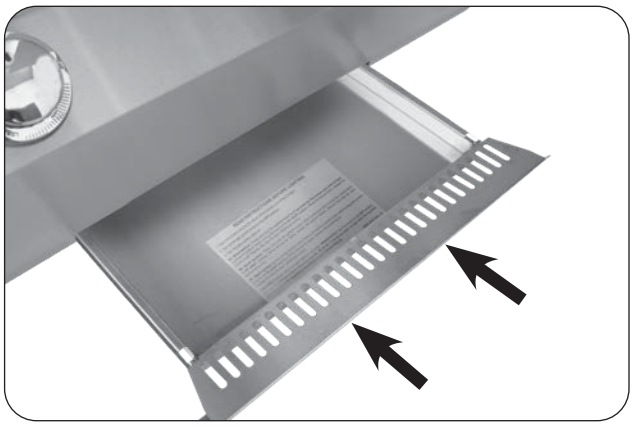

Fig. 19-3 Install drip tray

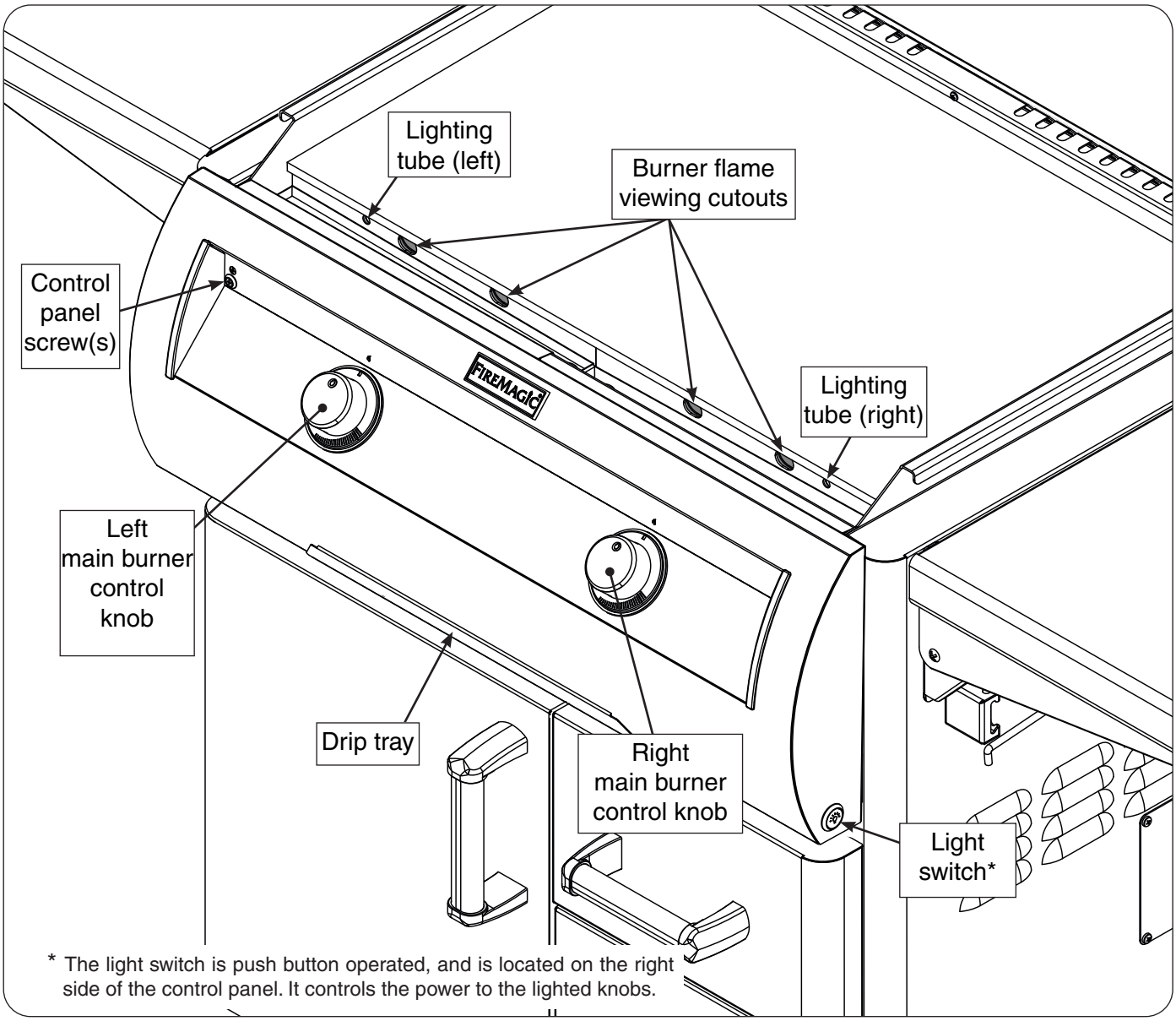

Fig. 20-1 E660s Griddle controls

USING THE GRIDDLE

BEFORE INITIAL USE

Ensure that:

- the unit has been properly installed and leak tested by a qualified professional service technician and as instructed in this manual.
- you have read and understand all of the information in this manual.

BEFORE EACH USE

Ensure that:

- you smell around the appliance area for gas. If you smell gas (and all control knobs are in the **OFF** position), immediately shut off the gas supply and contact a qualified professional service technician or the gas supplier for inspection.
- the vent openings and surrounding area of the unit are clear and free at all times.
- the cooking area, drip tray, and drip collector trough are clean, and the drip tray and drip collector trough are properly installed.
- you inspect all piping and hoses for damage, cuts, wear, and tear. Replace any damaged components prior to use.

OPERATION

- **The unit becomes HOT during use. NEVER touch any part of the cooking area or surrounding hot surfaces with bare hands. Use long-handled insulated BBQ tools and wear an insulated glove / oven mitt.**
- **Always keep your face and body as far from the unit as possible during use. Avoid wearing loose-fitting clothing as they could ignite.**
- **This appliance is designed as an attended appliance. DO NOT leave this appliance burning when unattended.**
- **After each use, turn the control knob(s) to the OFF position and turn off the gas supply to the unit.**

After reading and understanding all bullets above, follow these steps to light and use your griddle:

1. Remove the griddle lid. The back of enclosure has hooks to hang the lid. When using the hooks, the lid must hang from the far end of the hooks to maintain proper ventilation when cooking. See Fig. 21-1.
2. Wipe the cooking surface with a damp clean cloth to remove dust/grime.
3. Coat the cooking surface with a cooking oil or a non-stick cooking spray (high smoking point and low-sugar content is recommended).
4. Light the griddle per the LIGHTING INSTRUCTIONS section.
5. Turn the control knobs to the HI-LIGHT position and allow the griddle to preheat for 15 minutes (verify cooking temperatures with a surface thermometer).
6. Place the food on the cooking surface and cook as desired. Monitor the flames (through the burner flame viewing cutouts) and the temperature, and adjust the heat setting if necessary.

Note: Add cooking oil frequently as you cook to ensure the surface remains stick-resistant.

7. See the sections below and the following pages for all other information regarding use.

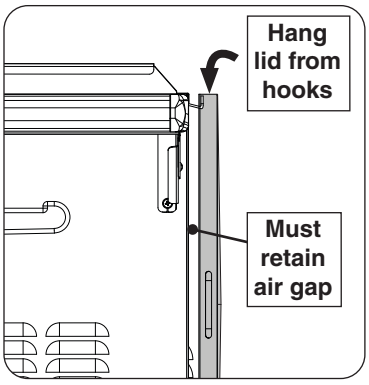

Fig. 21-1 Hang lid

WIND CONSIDERATIONS

Proper airflow (front-to-back, Fig. 21-2) MUST be maintained for the unit to perform as it was designed. See the INSTALLATION REQUIREMENTS section for details.

When using the unit in windy conditions, the wind can disrupt the airflow and cause overheating.

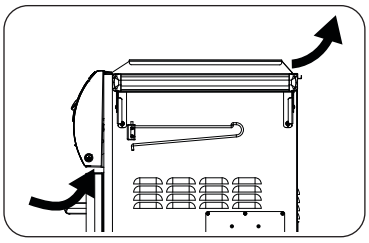

Fig. 21-2 Airflow diagram

AFTER EACH USE

1. Clean the cooking surface, drip collector trough, and drip tray as instructed in the SERVICING AND CLEANING section.
2. Once the unit has completely cooled, replace the stainless steel griddle lid and cover the entire unit with a griddle cover.

Note: For additional cleaning information, refer to the SERVICING AND CLEANING section.

ALLUMAGE DES INSTRUCTIONS (D'ALLUMAGE)

Lisez toutes les instructions avant l'allumage, et suivez ces instructions chaque fois vous lumière le unité.

ÉCLAIRAGE ÉLECTRONIQUE

Note: Le unité doit être relié à la puissance 120VAC pour l'éclairage électronique.

1. Retirez le couvercle de la plaque chauffante du dessus de la plaque chauffante.
2. Tournez tous les boutons de commande de gaz à leurs positions de repos.
3. Allumez le gaz à sa source.

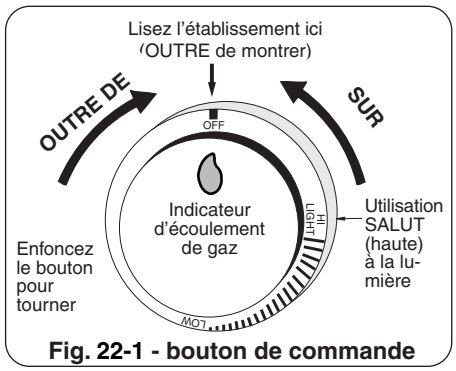

Fig. 22-1 - bouton de commande

Note: N'ouvrez pas plus d'une valve à la fois pour l'éclairage électronique ou manuel.

4. Appuyez sur le bouton de commande souhaité <u>pendant 5 secondes</u>. Assurez-vous que l'allumeur brille (à l'intérieur du tube d'éclairage), puis tout en appuyant, tournez le bouton dans le sens inverse des aiguilles d'une montre jusqu'à la position **HI LIGHT**. Une fois le brûleur allumé, relâchez le bouton.

Important: Inspectez les flammes du brûleur en regardant à travers les découpes d'observation de la flamme du brûleur situées au-dessus du bac collecteur d'égouttement. Ajustez la position de vision si nécessaire pour assurer la présence de flammes.

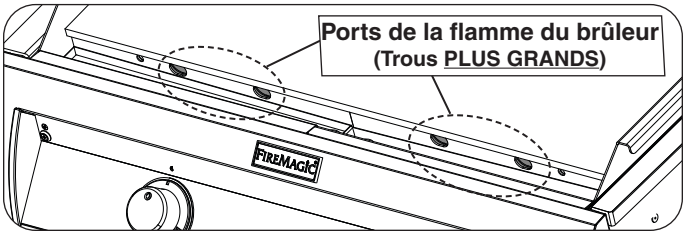

Fig. 22-2 - Ports de la flamme du brûleur

ATTENTION : Si un brûleur ne s'allume pas dans cinq (5) secondes d'allumer le bouton de commande, enfoncez le bouton et tournez-le à la position de repos. ATTENDEZ CINQ (5) MINUTES avant de répéter l'étape 4. Si vous sentez le gaz, suivez les instructions sur la couverture de ce manuel. Si les brûleurs ne s'allument toujours pas après que plusieurs tentatives, se rapportent aux instructions pour l'éclairage manuel.

5. Répétez l'étape 4 pour que chaque brûleur additionnel soit Lit.

EN EMPLOYANT UN RÉSERVOIR DE PROPANE PORTATIF
Des réservoirs de propane sont équipés d'un dispositif d'arrêt de sûreté qui peut ne pas causer le bas ou aucunes pression de gaz/flamme aux brûleurs si le fonctionnement et l'allumage des instructions ne sont pas suivis exactement (voir la note importante dans la section de dépannage pour plus de détails.)

ÉCLAIRAGE MANUEL

ATTENTION: Attendez toujours cinq (5) minutes le gaz pour se dégager après que n'importe quelle tentative non réussie d'éclairage.

1. Suivez les étapes 1 à 3 (à gauche).
2. Tenez un briquet au butane ou une allumette à tige longue jusqu'à l'ouverture du tube d'éclairage (trou **<u>PLUS PETIT</u>**) **<u>pendant 5 secondes</u>**. Puis appuyer sur le bouton de contrôle approprié et en appuyant tourner dans le sens antihoraire à la position HI LIGHT. Retirez le briquet ou des allumettes quand le brûleur s'allume, puis relâchez le bouton de commande. Voir la Fig. 22-3.
3. Si le brûleur ne se allume pas dans les cinq (5) secondes de tourner le bouton de commande, enfoncez immédiatement le bouton et tournez la valve à AU LOIN. ATTENDEZ CINQ (5) MINUTES avant de répéter les étape 2 des instructions manuelles d'éclairage.

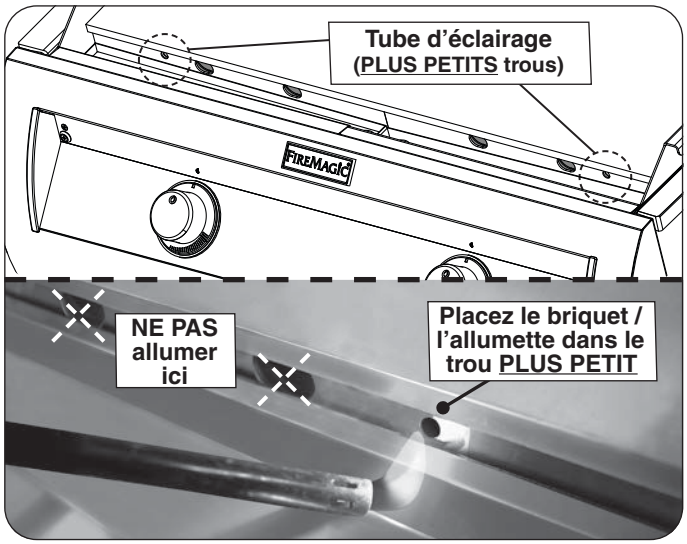

Fig. 22-2 - Éclairage manuel

ARRÊT DU UNITÉ

Pour couper le unité, diminuez chaque bouton de commande de valve et tout en pressant tour il dans le sens des aiguilles d'une montre à la position de repos.

Fermez toujours la valve de la fourniture de gaz après chaque utilisation du unité.

Pour votre convenance et sûreté ; quand le bouton de commande est tourné a la position de fonctionnement, l'indicateur d'écoulement de gaz changera de bleu en le rouge. (Le rouge indique l'écoulement de gaz.) Voir la Fig. 22-1.

LIGHTING (IGNITION) INSTRUCTIONS

Read all instructions before lighting, and follow these instructions each time you light the unit.

ELECTRONIC LIGHTING

Note: This unit must be connected to 120VAC power for electronic lighting.

1. Remove the griddle lid.
2. Turn all gas control knob(s) to their **OFF** position(s).
3. Turn on the gas at its source.

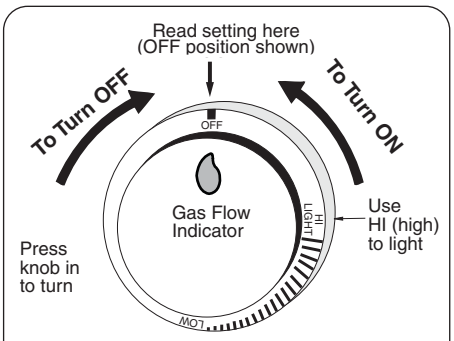

Fig. 23-1 Control knob

Note: DO NOT turn on more than one valve at a time for either electronic or manual lighting.

4. Depress the desired control knob **for 5 seconds**. Ensure the igniter is glowing (inside of lighting tube), then, while pressing turn the knob counterclockwise to the **HI LIGHT** position. Once the burner lights, release the knob.

Important: Inspect the burner flames by looking through the burner flame viewing cutouts located above the drip collector trough. Adjust viewing position if needed to ensure flame presence.

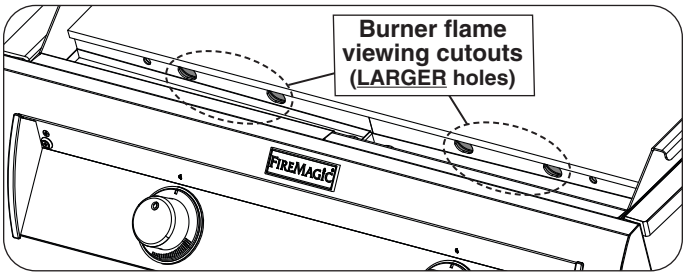

Fig. 23-2 **- Burner flame viewing cutouts**

CAUTION: If a burner does not light within five (5) *seconds* of turning on the control knob, depress the knob and turn it to the **OFF** position. WAIT FIVE (5) *MINUTES* before repeating step 4. If you smell gas, follow the instructions on the cover of this manual. If the burners still do not light after several attempts, refer to the instructions for manual lighting.

5. Repeat step 4 for each additional burner to be lit.

WHEN USING A PORTABLE PROPANE TANK

Propane tanks are equipped with a safety shutdown device that may cause low or no gas pressure/flame at the burners if operating and lighting instructions are not followed exactly (See important note in the TROUBLESHOOTING section for more details.)

MANUAL LIGHTING

CAUTION: Always wait five (5) minutes for gas to clear after any unsuccessful lighting attempt.

1. Follow steps 1 through 3 (left).
2. Hold a burning long-barrel butane lighter or burning long-stem match up to the opening of the lighting tube (**SMALLER hole) for 5 seconds**. Then depress the appropriate control knob and while pressing turn it counterclockwise to the **HI LIGHT** position. Remove the lighter or match when the burner lights, and release the control knob. See Fig. 23-3.
4. If the burner does not light within five (5) seconds of turning the control knob, **immediately depress the knob and turn the valve to OFF**. WAIT FIVE (5) MINUTES before repeating steps 2 through 4 of the MANUAL LIGHTING instructions.

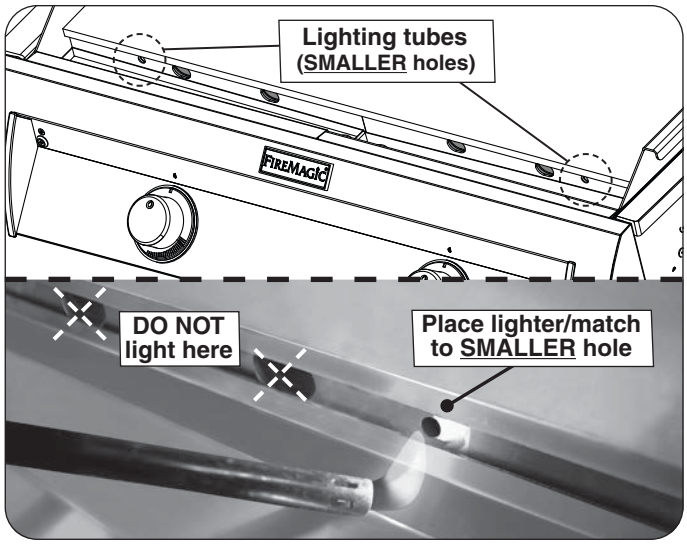

Fig. 23-3 **- Manual lighting**

SHUTTING OFF THE UNIT

To shut off the unit, depress each valve control knob and while pressing turn it clockwise to the **OFF** position.

Always close the valve from the gas supply after each use of the unit.

For your convenience and safety; when the control knob is turned to the on position, the gas flow indicator will change from blue to red. (Red indicates gas flow.) See Fig. 23-1.

USING THE FOLDING SHELF

DROP-SHELF OPERATION

A. To lower the shelf, grasp the middle of the shelf on both sides and lift upward so that the inner lip of the shelf, along the side of the cabinet, lifts out of the locking slot. Then use the handle to allow the end of the shelf to slowly rotate down as pictured to the right.

B. To raise the shelf, perform the opposite of A. above. Grab the shelf by the handle and raise to the horizontal position. Lift slightly upward from the center of the shelf on both sides, allowing the inner lip to drop down into the locking slot and lock the shelf safely into position.

CAUTION: Do **NOT** place fingers near hinge when closing.

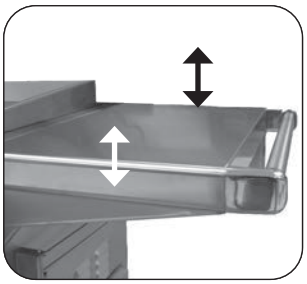

Shelf up & locked

Being lowered or raised

Shelf down

PAPER TOWEL HOLDER

This Fire Magic® unit comes with a fold-away paper towel holder.

To use the paper towel holder:

1. Make sure the collapsible shelf is extended and locked.
2. Grasp the rounded end of the paper towel holder firmly (without compressing it) and pull it away from the side of the cabinet wall so that it rotates toward the front and locks into the extended position.
3. Slide a roll of paper towels over the rounded end of the paper towel holder until the entire roll is on the holder and past the retaining lip.

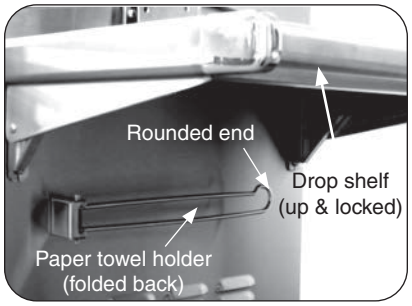

Fig. 24-2

When not in use, the rack may be folded back out of the way by firmly grasping the rounded end of the holder and rotating it back into position against the wall of the cabinet.

> **WARNING**
>
> Remove paper towels or anything flammable from the holder before folding it back against the hot wall. Placing flammable objects too close to a heat source may cause fire, property damage, or injury.

CAUTION: The paper towel holder must be folded back against the cabinet before lowering the collapsible shelf (see above). Failure to do so could result in damage to the unit.

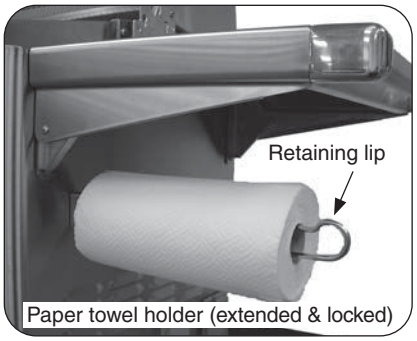

Fig. 24-3

REMOVING DRAWERS

To remove a drawer; pull it completely out. Release the drawer from the drawer slides by pressing the black lever down on the right side, and up on the left side.

To re-attach a drawer; extend the drawer slides completely and align the drawer into the slides, pushing the drawer closed. Open the drawer to verify that it has locked in place.

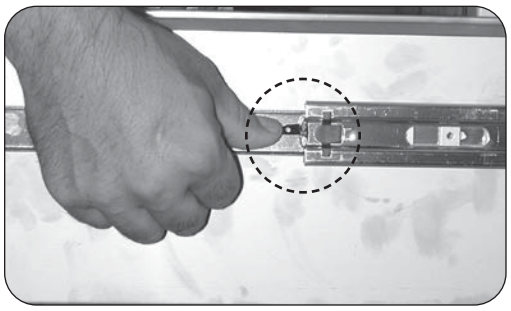

SERVICING AND CLEANING

Your griddle requires regular cleaning and maintenance. Refer to these instructions for details. Performing these procedures will ensure proper operation, appearance, and safety.

WARNINGS

- Prior to servicing or cleaning make sure the unit is completely cool, the control knobs are turned to the OFF position, the gas supply is shut off, the light switch is off, and the power supply is disconnected (unless otherwise stated).
- Wear appropriate gloves and safety glasses during any servicing or cleaning.
- The griddle MUST be cleaned regularly to prevent grease build-up and other food deposits. A clean and well maintained griddle prevents the risk of grease build-up and grease fires.
- Verify proper operation after servicing or deep cleaning.
- See INSTALLATION, OPERATION, AND SAFETY INFORMATION section for additional related information.

CLEANING YOUR GRIDDLE

Before Each Use

1. **Inspect and clean the cooking surface and exterior surfaces of the unit:** With a cool griddle, clean any dust, grease, splatter, or spills as needed with a damp clean cloth.

After Each Use

1. **Clean the cooking surface:** Operate the griddle on high until hot. Then turn OFF the griddle and follow the steps below to clean. Wear an insulated glove / mitt.

   a. Lightly pour water on the cooking surface (or use a non-toxic griddle cleaning solution, highly recommended - not included). Then scrub using a heavy duty non-scratch scrub pad on the end of a long-handled insulated tool/tongs/etc.

   DO NOT flood the griddle with cold water or any liquid. This will cause damage to the griddle top, and cause the drip tray to overflow.

   CAUTION: Steam will be hot.

   b. Use a long-handled insulated stainless steel spatula or heat-resistant squeegee to scrape the grime from back to front and into the drip collector trough.

   c. Wipe down with a damp, clean, heavy-duty rag. Remove all cleaning solution if used.

   d. Lightly coat the cooking surface with cooking oil to preserve it until the next cook.

2. **Clean the drip collector trough and drip tray:** When the griddle is cool, carefully remove the left and right trough pieces and dispose of contents appropriately. Clean in a soapy water solution. For tough deposits, a copper pad can be used. Always wipe with the grain. Rinse and dry completely, then replace the trough assembly.

   Carefully remove the drip tray and dispose of contents appropriately. Clean in a soapy water solution. Rinse and dry completely, then insert the drip tray back into the griddle.

3. **Cover your griddle:** Once the griddle is dry and cool, place the griddle lid and cover your griddle with a Fire Magic protective cover (not included).

Continued on next page

Twice A Year - Deep Clean

1. **Interior of griddle:** In addition to cleaning the cooking surface, drip collector trough, and drip tray, a deep clean of the interior of the griddle, burners, and all components MUST be performed twice a year. Follow the steps below.

   a. With a cool griddle, remove the griddle top, heat distribution grids, burners, drip tray chute, and air baffle. Clean all components in a soapy water solution, rinse, dry, and set aside. For tough deposits and burners, a copper pad can be used.

   Note: Refer to the parts list and the GRIDDLE TOP REMOVAL, BURNER REMOVAL, and DRIP TRAY CHUTE REMOVAL sections as needed.

   Important: The burner ports and carry-over ports/slots MUST be kept clean to ensure proper ignition and operation.

   b. Interior liner: use a stainless steel putty knife to remove any grease and food deposits. Then use a grill cleaner and a copper pad to scrub the liner. Fire Magic grill cleaner is recommended. Follow instructions provided with the grill cleaner.

   Wipe down the entire surface of the liner with a wet, clean, heavy-duty rag. Remove all cleaner.

   c. Re-install all components removed during this process.

2. **Exterior of griddle (except cooking surface):** With a cool griddle, use a grill cleaner (or a soapy water solution) and a clean cloth to remove grease and dirt from the lid and control panel. For tough deposits, a copper pad can be used. Always wipe with the grain. Rinse and dry completely. Then follow up with a stainless steel cleaner and a clean cloth.

   If this routine cleaning is not performed, the stainless steel may become dull and develop surface rust (due to use and atmospheric conditions). If left uncleaned, significant damage and pitting may occur.

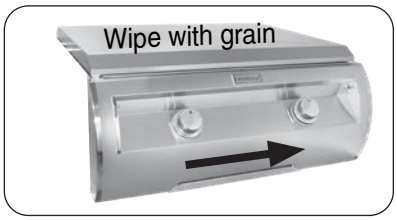

Fig. 26-1 Wipe with grain

Important: DO NOT use steel wool, any other metal tools, or any other cleaners/chemicals to clean the exterior other than recommended above. Such items promote rust.

Note: Due to the nature of stainless steel, temperatures produced by the cooking process will cause discoloration. This can be reduced by routine cleaning.

The griddle top cooking surface is only to be cleaned per the instructions on the previous page.

For Environments High In Salt, Chloride, Or Other Corrosive Chemicals

When this griddle is installed in a corrosive environment such as near the ocean (salt air), poolside (chlorine and/or pool chemicals) or any other location with exposure to high salt/chloride content or corrosive chemicals/solutions, it will be more susceptible to corrosion and MUST be maintained/cleaned more frequently.

- DO NOT store any corrosive chemicals (chlorine, hydrochloric acid, fertilizer, etc.) near your stainless steel griddle.
- DO NOT allow any corrosive materials (masonry dust, debris, etc.) to settle on your stainless steel griddle.
- These environments, chemicals, and materials may cause the 304 stainless steel to develop surface rust and consequently pitting. Under these conditions the griddle exterior MUST be cleaned at least monthly. Inspect your griddle often and clean accordingly.

Protecting Your Griddle

In addition to the supplied griddle lid (placed first), an optional Fire Magic protective cover will protect your griddle when not in use. Install the cover on a cool and dry griddle. DO NOT cover a damp griddle. During high humidity or after rainy conditions, remove the cover to dry trapped moisture if present. (If the cover is installed over a damp griddle it can cause surface rust.)

Ensure that the INSIDE of the cover is DRY before putting it back on the griddle.

GRIDDLE TOP REMOVAL

1. Remove the rear exhaust plate by loosening the three bolts and nuts (do not disassemble), then lift the panel up from the griddle top (see Fig. 27-1).
2. Locate the screw found on rear of the griddle top and remove (see Fig. 27-2).
3. Remove the griddle top by lifting the griddle upward and out from the main frame. Carefully rest on a sturdy surface.

Note: Lift the griddle top from the left and right raised walls. Reference Fig. 27-3.

CAUTION: THE GRIDDLE TOP IS HEAVY AND REQUIRES TWO PEOPLE FOR SAFE HANDLING.

4. Replace the griddle top, its screw, and the rear exhaust plate once complete.

HEAT DISTRIBUTION GRID(S) REMOVAL

1. Remove the griddle top (see GRIDDLE TOP REMOVAL section above).
2. Remove the grid(s) as shown in Fig. 27-4. Lift from the rear, and free the front tabs (on the grid) from the cutouts in the front firebox wall.
3. Replace the grid(s) and griddle top once complete.

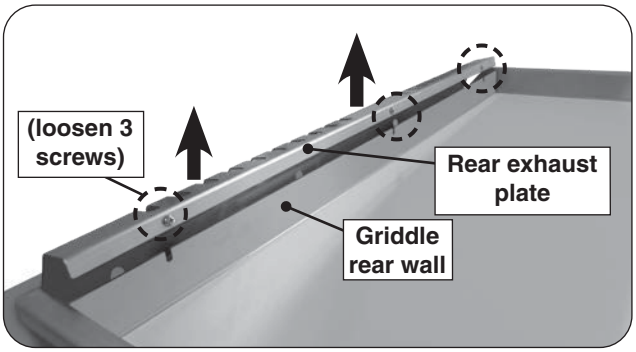

Fig. 27-1 Rear exhaust plate removal

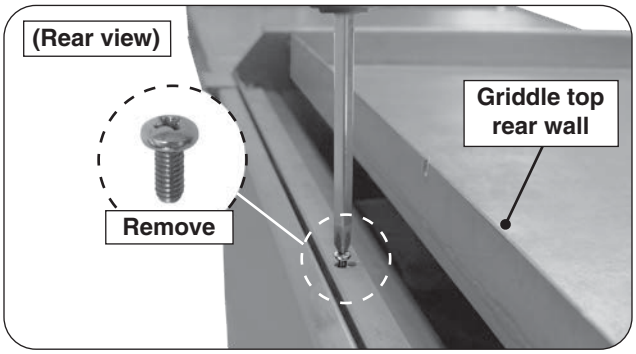

Fig. 27-2 Rear screw removal

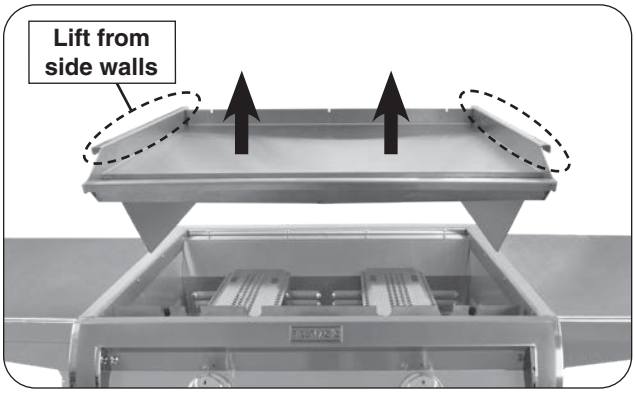

Fig. 27-3 Griddle top removal

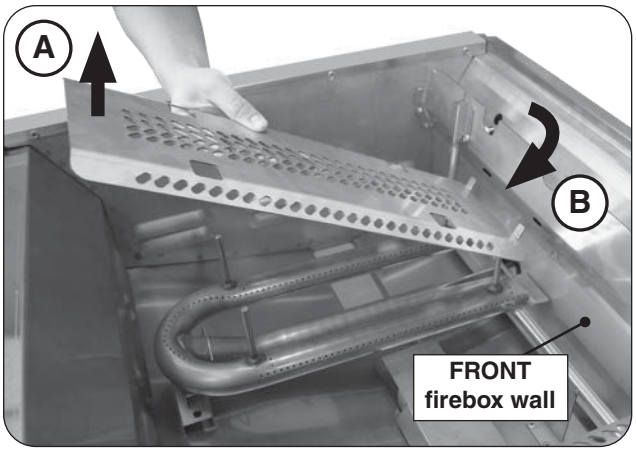

Fig. 27-4 Heat distribution grid(s) removal

BURNER(S) REMOVAL

1. Remove the griddle top and heat distribution grid(s) (see GRIDDLE TOP REMOVAL and HEAT DISTRIBUTION GRID REMOVAL sections on previous page).
2. Locate the burner clip (located over the rear center tube of the burner) and slightly pinch and remove the clip from the burner support. See Fig. 28-1.
3. Carefully lift the burner from the burner support anchor peg holes and out from the hole in the forward fire wall.
4. To replace the burner, slide the open cylindrical end of the burner around the orifice, enveloping it and centering on it. Then lower the back end anchor pegs into the burner support anchor peg holes.

Note: It is critical to the continued safe functioning of the burners that the orifices are centered and completely inside the burner gas inlets.

5. Re-install the burner clip around the burner and into the holes in the burner support.
6. Replace the heat distribution grid(s) and griddle top.

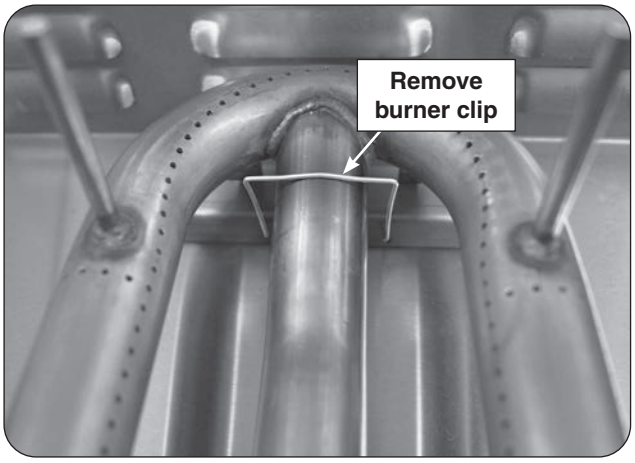

Fig. 28-1 Main burner removal

DRIP TRAY CHUTE REMOVAL

1. Remove the griddle top (see GRIDDLE TOP REMOVAL section on previous page).
2. Remove the drip tray chute by pulling it upward (see Fig. 28-2).

Note: Take note of the flange located on the top front of the chute for re-installation.

3. To replace, drop the chute back into the top and bottom cutouts of the front firebox wall. The front flange MUST sit flush against the firebox wall. See Fig. 28-3.

Important: The chute must be properly installed for the griddle top to install correctly.

4. Replace the griddle top.

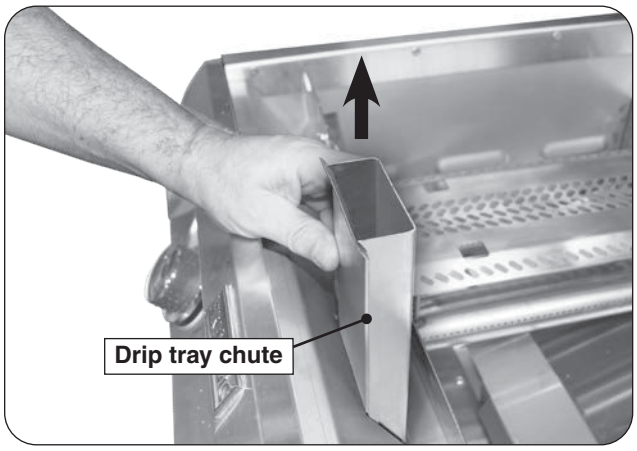

Fig. 28-2 Drip tray chute removal

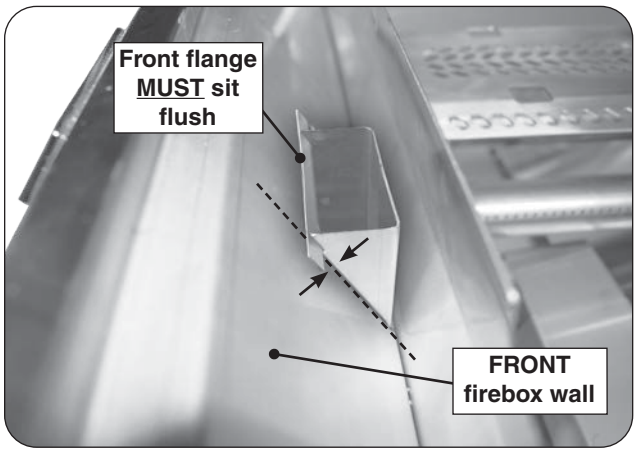

Fig. 28-3 Drip tray chute installed

POWER SUPPLY FUSE REPLACEMENT

If the unit is connected to the power supply but the ignition system and knob lights are not functioning, fuse replacement may be required.

1. **Ensure the knobs are in the OFF position, the gas supply is turned off, and the light switch is off.**
2. Disconnect the power supply cord from line power.
3. Locate the power supply access plate on the right wall of the griddle cabinet. Remove the 6 screws (top 3 and bottom 3) to access the power supply. See Fig. 29-1.
4. Locate the fuse holder on the power supply (see Fig. 29-2).
5. Turn the fuse cap counterclockwise to remove the cap and access the fuse.
6. Replace with a new fuse (model # 24-B-57).
7. Re-secure the fuse cap.
8. Reset the GFCI receptacle if needed, then test the unit.

Note: If the unit powers up but some or all components are not responding, reference the TROUBLESHOOTING section.

9. Re-install the power supply access plate.

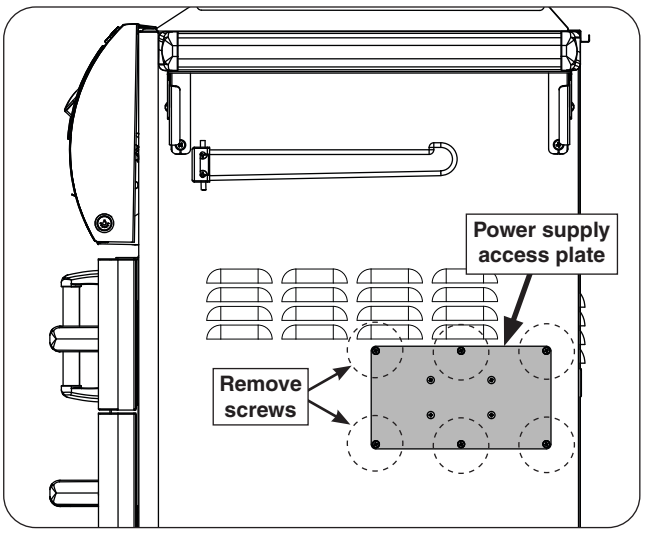

Fig. 29-1 Remove power supply plate

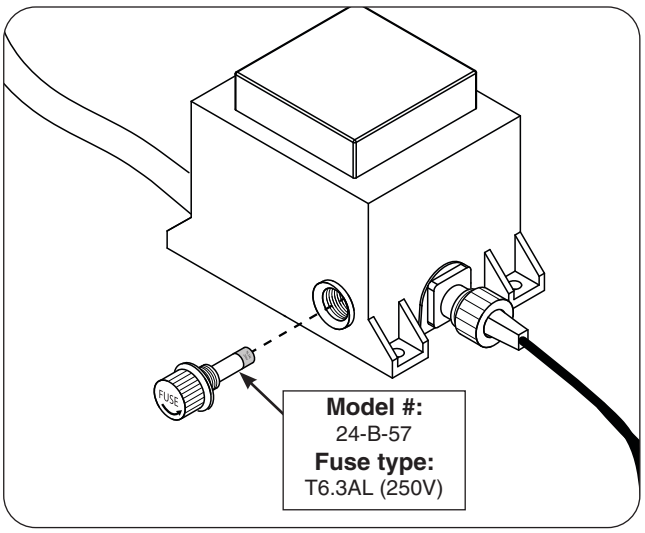

Fig. 29-2 Fuse replacement

CONTROL PANEL REMOVAL

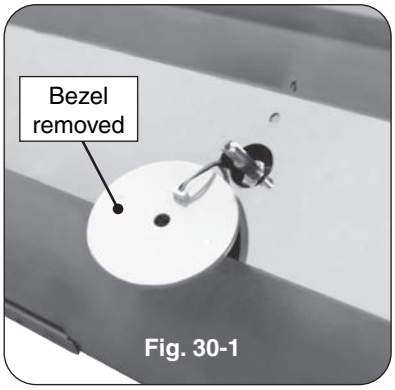

Fig. 30-1

1. **Turn the control knob(s) to the OFF position and turn off the gas supply to the unit.**
2. Turn off the light switch and disconnect the power supply from the power source.
3. Pull the control knob(s) from the stems and set aside.
4. Slowly lift away the lighted bezels to clear the valve stems, and let rest as shown in Fig. 30-1.
5. Remove the drip tray.
6. Using a Phillips screwdriver, unscrew and remove the control panel fastener screws and washers (located on the left and right front face of the control panel). Retain the screws for later re-installation.
7. Carefully open the control panel by lifting and pulling the control panel from the frame, allowing it to rest on the internal chain(s).

Important: When opening, take caution to not damage any wiring.

8. If wire disconnections are required, reference the wire diagram in the MODEL SPECIFICATIONS section in this instruction manual or the wire diagram label affixed to the inside of the control panel.

Note: Secure any disconnected wires (coming from the inside of the unit) to prevent them from falling in.

Note: Whenever reconnecting <u>any wires</u>, apply a small amount of dielectric grease to the <u>male</u> connector, then make the connection. This will ensure conductivity and prevent moisture from affecting the contact.

Important: During reinstallation; prior to opening the gas shut-off valve, be sure the control knob(s) are in the OFF position.

CONVERT GAS TYPE / CHECK BURNER ORIFICES

CAUTION: Make sure the unit is at a safe temperature and isolated from gas and electrical supplies before beginning.

For your safety, exercise caution, and make sure you have adequate hand protection, such as gloves, when handling metal parts.

Apply Conversion Label

This unit comes from the factory configured for one type of gas as marked on the label inside the cabinet.

When the unit is converted, the label for the new gas (included at original shipping) MUST be filled out and applied <u>next to the existing label</u> mentioned above.

Convert Regulator

The gas regulator, located behind the control panel (see CONTROL PANEL REMOVAL section), must be set for the type of gas used to fuel the unit. To check the regulator setting, remove the cap in the center of the regulator (Fig. 31-1, A). Holding the cap vertical (see Fig. 31-1, B), the letters at the bottom of the plastic stalk indicate the gas type for which the regulator is currently configured.

If the text on the bottom of the regulator stalk does not match the gas type connected to the unit, remove the stalk from the cap, invert, and replace into center of cap. Replace cap on the regulator, screwing down until snug. Replace the control panel.

Procedure continued on following page

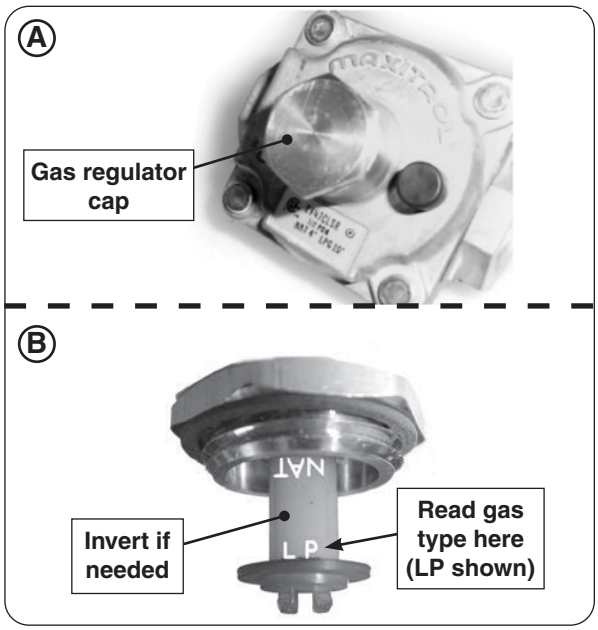

Fig. 31-1 Regulator conversion

Convert Gas Orifices

When converting the unit to a different gas type, each burner's orifice must be replaced with the corresponding orifice for the new gas.

See Table 1 to determine the proper orifice sizes for each burner.

Important: It is critical to the operation of each burner that its orifice be fully inserted into the center of its orifice opening.

WARNING

HAZARDOUS OVERHEATING WILL OCCUR IF A NATURAL-GAS ORIFICE IS USED WITH PROPANE GAS.

1. Remove the griddle top (see GRIDDLE TOP REMOVAL section).
2. Remove the heat distribution grids and burners (see HEAT DISTRIBUTION GRID REMOVAL and BURNER REMOVAL sections).
3. Use a $^3/_8$" hex nut driver to remove the exposed orifices (Fig. 32-1). Check orifices. If needed, replace them with the correct orifices for the new gas.
4. Replace the burners.

Note: It is critical to the continued safe functioning of the burners that the orifices are centered and completely inside the burner gas inlets.

5. Replace the heat distribution grids and griddle top.

Connect To New Gas Supply

Plumb the unit as appropriate for the new gas supply. (Additional components may be needed for your specific setup.) **Be sure to leak test at all connections.**

Natural-gas to propane-gas conversions using a tank internal to a portable griddle requires installation of a propane tank holder (not included). This tank holder must be purchased separately from the manufacturer. See Table 1.

Fig. 32-1 Orifice conversion

AIR SHUTTER ADJUSTMENT / BURNER FLAME INSPECTION

Important: Air shutters are preset at the factory (see Table 1 in MODEL SPECIFICATIONS). However, gas conversion, altitude, or other local conditions may make it necessary to adjust the air shutters.

Note: To verify proper settings, the flames of the burners should be visually checked for proper flame appearance and behavior. Light the grill with the burner(s) on HI setting. Allow at least 2 minutes to burn. See below and Fig. 33-1. The flames should:

- be blue and stable with little to no yellow tips
- burn quietly, and appear to touch the burner

If the flames appear unstable, yellow, noisy, or lift away from the burner, follow the steps below.

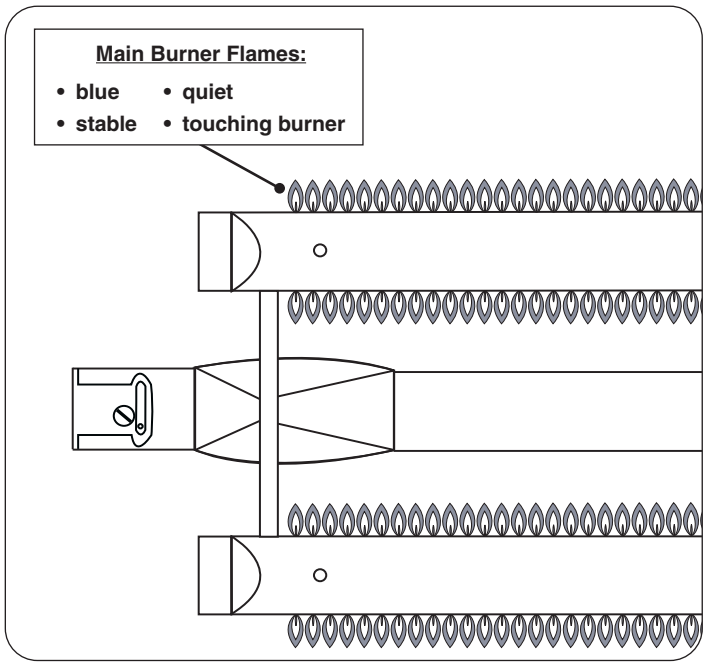

Fig. 33-1 Proper flame appearance

Main Burner

Begin with a completely cool grill. Remove the burners (see BURNER REMOVAL section). First ensure the burner orifice, ports, venturi tubes, and air shutter are all clear of any insect or insect nests. If they are blocked, clean them, reinstall the burners, and reinspect the flames. If adjustment is still needed, **allow the unit to cool**, remove the burner, and proceed to the steps below.

1. To adjust the air shutter, loosen the adjustment screw with a flathead screwdriver. Then rotate the shutter to open or close it. See Fig. 33-2 for details.
   - Begin with the appropriate factory setting for your model (see Table 1 if needed).
   - If the flames were excessively yellow (insufficient air), open the shutter to allow more air to the burner. If the flames were noisy and lifting off the burner in some areas, close the shutter to allow less air to the burner. Adjust accordingly.

Note: Make minimal adjustments. Very small changes result in major changes in flame appearance.

2. Reinstall the burner, light the grill with the burner on HI, and observe the flames. If needed, allow the grill to completely cool, and repeat the adjustment process until the proper flame is achieved.
3. Once finished, allow the grill to completely cool, remove the burner, and tighten the adjustment screw. Reinstall the burner and all other components that were removed.
4. Repeat for all other main burners as needed.

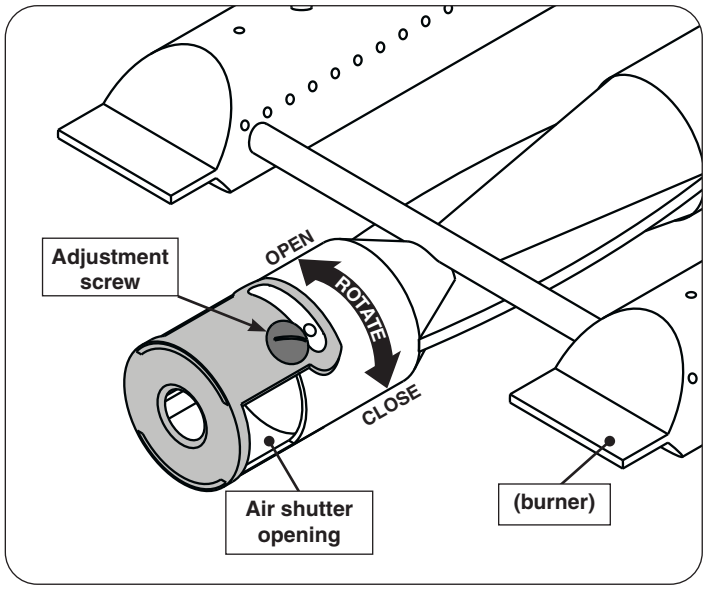

Fig. 33-2 Main burner air shutter adjustment detail

VALVE "LOW" SETTING ADJUSTMENT

Stability of the "low" setting on the burners may vary due to wind direction, grill configuration, and grill position. If your burner goes out when set on low, the valve "low" setting needs adjustment.

Note: Adjustments MUST only be performed by a qualified professional service technician.

To adjust the valve "low" setting:

1. **Ensure the unit is completely cool and the knobs are in the OFF position.**
2. Remove the griddle top and heat distribution grids. See the GRIDDLE TOP REMOVAL and HEAT DISTRIBUTION GRID(S) REMOVAL section for details.
3. Light the burner on HIGH, then turn the burner to LOW setting. While the burner is lit, remove the control knob from the valve.
4. Locate the FLATHEAD adjustment screw found inside the valve stem (see Fig. 34-1).
5. Using a flathead screwdriver, slowly turn the adjustment screw a little at a time (30° to 45°) in either direction. Adjust the screw as needed until the flame is approximately 1/4" in height from all the burner ports, and the flames are stable.
6. Once the appropriate setting is reached, re-install the control knob and shut off the burner valve.
7. Repeat this procedure for other burner valves, if needed.
8. Reinstall the heat distribution grids, griddle top, and any other components thet were removed.

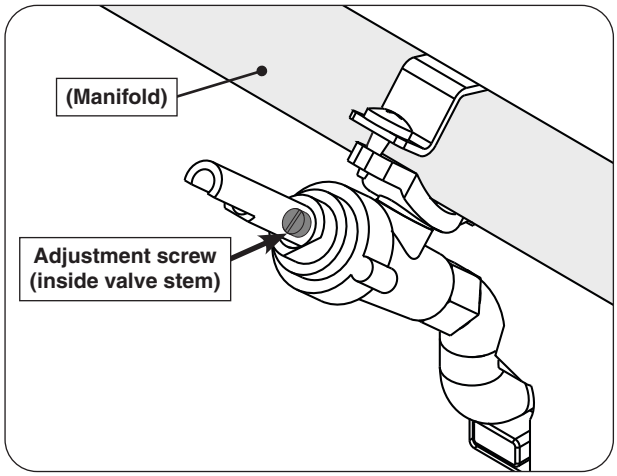

Fig. 34-3 Valve adjustment screw location

TROUBLESHOOTING

If you have trouble with the unit, please use this list to identify the problem. By trying one or more of the solutions to the possible cause, you should be able to solve the problem. If this list does not cover your present problem, or if you have other technical difficulties with the unit, please contact your local dealer.

PROBLEM	POSSIBLE CAUSE	CORRECTION
Accessories do not operate	1. Power source not hooked to power supply	1. Hook external power to unit.
Ignition system failure	1. Power source not hooked to power supply 2. Improper air shutter adjustment 3. Ignition wire disconnected 4. Low gas pressure 5. Front carry-over port 6. Blown fuse in power supply box 7. Igniter malfunction 8. Igniter switch malfunction on valve	1. Hook external power to unit. 2. Adjust air shutters. 3. Plug wires back into ignition switches. 4. Have the gas co. check pressure at unit. 5. Clean burner ports. 6. Replace the fuse. Reference the POWER SUPPLY FUSE REPLACEMENT section. 7. Contact dealer for replacement. 8. Contact dealer for replacement.
Insufficient heat / low flame	1. Burner ports clogged 2. Improper air shutter adjustment 3. Using propane orifice for natural gas 4. Low gas pressure/flame (propane) 5. Low gas pressure/flame (natural) 6. L.P. regulator hose cracked due to age	1. Clean burner ports. 2. Adjust air shutters. 3. Check/change orifices. 4. Shut off all valves, including propane tank, and follow lighting instructions exactly. (See important note* below.) 5. Have a qualified professional service technician check for proper gas supply, setup, and pressure. 6. Replace L.P. regulator hose.
Uneven heating	1. Burner ports partially blocked by debris 2. Small spiders or insects in burner 3. Improper air shutter adjustment	1. Remove burners and clean out ports. 2. Inspect burners and orifices for spider webs or other debris that may block flow. 3. Adjust air shutter.
Knob lights not operating	1. Light switch not functioning 2. Knob light(s) burned out	1. Contact dealer for replacement. 2. Contact dealer for replacement.
Burner goes out on LOW	1. Valve "Low" setting needs adjustment	1. Light burner on HIGH, immediately turn to LOW setting. Remove knob from valve and using a small flat screwdriver, slowly turn the adjustment screw in the stem, a little at a time (30° to 45°), in either direction, until the flame is approximately 1/4" in height from burner ports.

*** Important:** Propane tanks are equipped with a safety shutdown device that may cause low or no gas/flame at the burners if operating and lighting instructions are not followed exactly. **If you suspect the propane tank safety shutoff is in effect:** 1) Shut off all griddle burner valves. 2) Shut off tank valve. 3) Open and close a main burner valve. 4) Open tank valve. 5) Follow the LIGHTING INSTRUCTIONS. Lighting instructions are located in your owner's manual and printed on the unit's metal drip tray. If the problem persists, continue troubleshooting, or contact your local dealer or R. H. Peterson for assistance.

WARRANTY

PETERSON FIRE MAGIC GRILLS AND ACCESSORIES

LIMITED WARRANTY

Robert H. Peterson Co. ("RHP") warrants your Fire Magic® grill to be free from defects in material and workmanship.

Fire Magic® cast stainless-steel gas burners, Choice stainless steel U-shaped burners, cooking grids, and stainless steel housings are warranted as long as you own your Fire Magic® grill **-- LIFETIME**. (Except as described below.)

Fire Magic® valves, manifold assemblies, inner liners, porcelain housings (including ovens and barbecue faces), and **backburner assemblies** (except ignition parts) are warranted for **FIFTEEN (15) YEARS**.

Fire Magic® Electric Grill stainless steel cooking grids and stainless steel housings are warranted for **TEN (10) YEARS**.

Fire Magic® built-in and portable griddles (except ignition system) are warranted for **TEN (10) YEARS**. (Except as described below.)

Fire Magic® Infra-red burners, flavor grids, and charcoal stainless steel grills are warranted for **FIVE (5) YEARS**; except for the charcoal pan, charcoal grid, thermometer, and ash catch tray, which are warranted for **ONE (1) YEAR**.

Fire Magic® sideburners, exterior Glass Fiber Reinforced Concrete (GFRC) grill island systems, and all other grill components (except ignition systems and electronic parts) are warranted for **THREE (3) YEARS**.

Fire Magic® grill and griddle ignition systems (excluding batteries), electronic components (including lights and thermometers), and grill accessories are warranted for **ONE (1) YEAR**.

A COPY OF YOUR SALES SLIP FOR PROOF OF PURCHASE IS REQUIRED

This warranty applies to the original purchaser for products which are installed in the United States or Canada and which are operated and maintained as intended for single family residential usage (If the grill is installed in a multi-user setting, a separate Multi-User Limited Warranty applies and is available from R.H. Peterson Co.). This warranty is valid only with proof of purchase, commence on the date of purchase, and terminates (both as to original and any replacement products) on the anniversary date of the original purchase of the product per the above schedules.

This warranty covers defects in material and workmanship. This warranty **does not** cover parts which become defective as a result of negligence, misuse, use not in compliance with the Installation and Owner's Manual, accidental damage, improper handling, improper storage, improper installation, **lack of required routine maintenance** (as specified in the Installation and Owner's Manual), electrical damage, local gas impurities or failure to protect against combustibles. Product must be installed (and gas must be connected) as specified in the Installation and Owner's Manual by a **qualified professional installer**. Modifications to products which are not specifically authorized will void this warranty. Accessories, parts, valves, remotes, etc. when used must be Peterson products or this warranty is void. Warrantied items will be repaired or replaced at Peterson's sole discretion. This warranty **does not** apply to rust, corrosion, oxidation, or discoloration unless the affected part becomes inoperable.

This warranty **does not** cover labor or labor related charges, except as provided by separate specific written programs from the Peterson Co. All repair work must be performed by a qualified professional service person and requires prior approval of Peterson.

Peterson may require the defective product or part to be returned to the factory to determine the cause of failure. Peterson will pay freight charges if the product or part is determined to be defective. This warranty does not cover breakage in shipment from our (Independent) distributor to its customer if the damage is determined to have occurred during that shipment.

This warranty specifically excludes liability for **indirect**, **incidental**, or consequential damages. Some states and provinces do not allow the exclusion or limitation of incidental or consequential damages, so the above exclusion may not apply to you. This warranty gives you specified legal rights, and you may have other rights that vary from state to state or province.

For additional information regarding this warranty, or to place a warranty claim, contact the R. H. Peterson dealer where the product was purchased.

When contacting your Peterson dealer or the R. H. Peterson Co., please provide the following information:

- Your name, address, telephone number, e-mail
- Sales receipt showing where purchased and date purchased
- Model number, serial number of product, date code
- Relevant information: installer, additions, repairs, when defect was first noted

TO REGISTER YOUR PRODUCT ONLINE GO TO: WWW.RHPETERSON.COM, AND CLICK ON PRODUCT REGISTRATION. THANK YOU FOR YOUR PURCHASE.

Quality Check				**Date:**_____	
Burner Orifices	**Nat.**	**L.P.**	**Leak Test:**	_____	**Model#:** _____
Main:	_____	_____	**Burn Test:**	_____	**Serial#:** _____
Other:	_____	_____	**Gas Type:**	**Nat. / L.P.**	**Air Shutter:** _____
					Inspector: _____

Robert H. Peterson Co. • 14724 East Proctor Avenue • City of Industry, CA 91746