FIREMAGIC

ECHELON

DIAMOND "A" SERIES

PORTABLE OUTDOOR GAS GRILL

E660s, E790s, and E1060s

INSTALLATION AND OWNER'S MANUAL

INSTALLER: Leave these instructions with consumer.
CONSUMER: Retain for future reference.

E790s shown

IMPORTANT: READ THESE INSTRUCTIONS CAREFULLY BEFORE STARTING INSTALLATION OR USE.

WARNINGS AND SAFETY CODES

⚠ DANGER:

IF YOU SMELL GAS:

- Shut off gas to the appliance.
- Extinguish any open flame.
- Open lid.
- If odour continues, keep away from the appliance and immediately call your gas supplier or the fire department.

ONLY TO BE USED OUTDOORS

CODE AND SUPPLY REQUIREMENTS: Installation must conform with local codes or, in the absence of local codes, with either the National Fuel Gas Code, ANSI 2223.1/NFPA 54, or the Natural Gas and Propane Installation Code, CSA B149.1, or the Propane Storage and Handling Code, CSA B149.2, as applicable.

The outdoor cooking gas appliance and its individual shut-off valve must be disconnected from the gas supply piping system during any pressure testing of that system at test pressures in excess of 1/2 psi (3.5 kPa).

The outdoor cooking gas appliance must be isolated from the gas supply piping system by closing its individual manual shut-off valve during any pressure testing of the gas supply piping system at test pressures equal to or less than 1/2 psi (3.5 kPa).

Proper operation of your grill requires prompt and periodic maintenance. See the SERVICING AND CLEANING section for details.

⚠ WARNING:

- Do not store or use gasoline or other flammable liquids or vapours in the vicinity of this or any other appliance.
- An LP cylinder not connected for use shall not be stored in the vicinity of this or any other appliance.

⚠ WARNING:

Improper installation, adjustment, alteration, service, or maintenance can cause injury or property damage. For proper installation, refer to the installation instructions. For assistance or additional information, consult a qualified professional service technician, service agency, or the gas supplier.

This appliance is designed as an <u>attended appliance</u>. <u>DO NOT</u> leave this appliance burning when unattended.

If an external electrical source is utilized, the outdoor cooking gas appliance, when installed, must be electrically grounded in accordance with local codes or, in the absence of local codes, with the National Electrical Code, ANSI/NFPA 70, or the Canadian Electrical Code, Part I, CSA C22.1.

Keep any electrical supply cord and the fuel supply hose away from any heated surfaces.

Cooking Grid U.S. Patent Nos. D857,453 D862,984

PFS® C US

Certified to: ANSI Z21.58 CSA 1.6

Robert H. Peterson Co. • 14724 East Proctor Avenue • City of Industry, CA 91746

FIREMAGIC®

ECHELON

DIAMOND "A" SERIES

ECHELON GRIL EXTÉRIEUR DE GAZ DU PORTATIF

E660s, E790s, et E1060s

INSTALLATION ET LE MANUEL DU PROPRIÉTAIRE

INSTALLATEUR: laissez ces instructions au consommateur.
CONSOMMATEUR: À conserver pour référence future.

E790s illustré

IMPORTANT: LIRE ATTENTIVEMENT CES INSTRUCTIONS AVANT DE COMMENCER L'INSTALLATION OU L'UTILISATION.

AVERTISSEMENTS ET CODES DE SÉCURITÉ

⚠ DANGER:

SI VOUS SENTEZ DU GAZ:

- Coupez le gaz de l'appareil.
- Éteignez toute flamme nue.
- Ouvrez le couvercle.
- Si l'odeur persiste, éloignez-vous de l'appareil et appelez ***immédiatement*** votre fournisseur de gaz ou les pompiers.

À UTILISER UNIQUEMENT À L'EXTÉRIEUR

EXIGENCES EN MATIÈRE DE CODE ET D'APPROVISIONNEMENT: L'installation doit être conforme aux codes locaux ou, en l'absence de codes locaux, soit au *National Fuel Gas Code*, ANSI 2223.1/NFPA 54, soit au *Natural Gas and Propane Installation Code*, CSA B149.1, soit au *Code de stockage et de manipulation du propane*, CSA B149.2, selon le cas.

L'appareil de cuisson au gaz extérieur et son robinet d'arrêt individuel doivent être déconnectés du système de tuyauterie d'alimentation en gaz pendant tout essai de pression de ce système à des pressions d'essai supérieures à 1/2 psi (3,5 kPa).

L'appareil de cuisson au gaz extérieur doit être isolé du système de tuyauterie d'alimentation en gaz en fermant son robinet d'arrêt manuel individuel pendant tout test de pression du système de tuyauterie d'alimentation en gaz à des pressions d'essai égales ou inférieures à 1/2 psi (3,5 kPa).

Le bon fonctionnement de votre gril nécessite un entretien rapide et périodique. Voir la section ENTRETIEN ET NETTOYAGE pour plus de détails.

⚠ ATTENTION:

- N'entreposez pas et n'utilisez pas d'essence ou d'autres liquides ou vapeurs inflammables à proximité de cet appareil ou de tout autre appareil.
- Une bouteille de GPL non connectée pour utilisation ne doit pas être stockée à proximité de cet appareil ou de tout autre appareil.

⚠ ATTENTION:

Une installation, un réglage, une modification, un entretien ou une maintenance inappropriés peuvent causer des blessures ou des dommages matériels. Pour une installation correcte, reportez-vous aux instructions d'installation. Pour obtenir de l'aide ou des informations supplémentaires, consultez un technicien de service professionnel qualifié, une agence de service ou le fournisseur de gaz.

Cet appareil est conçu comme un <u>appareil surveillé</u>. <u>NE PAS</u> laisser cet appareil brûler sans surveillance.

Si une source électrique externe est utilisée, l'appareil à gaz de cuisson extérieur, lorsqu'il est installé, doit être mis à la terre conformément aux codes locaux ou, en l'absence de codes locaux, avec le *National Electrical Code*, ANSI/NFPA 70, ou le *Canadian Electrical Code*. Code, Partie I, CSA C22.1. Gardez tout cordon d'alimentation électrique et le tuyau d'alimentation en carburant à l'écart de toute surface chauffée.

Grille de cuisson US
Numéros de brevet
D857,453
D862,984

PFS® C US

Certifié à : ANSI Z21.58
CSA 1.6

CONTENTS

GETTING STARTED

AVERTISSEMENTS 4
INSTALLATION, OPERATION, AND SAFETY INFORMATION 5
ELECTRICAL CONNECTIONS 5
GAS SAFETY INFORMATION 6
WARNING 6
WHEN USING PROPANE GAS 6
WHEN USING NATURAL GAS 6
INSTALLATION SAFETY GUIDELINES 6
OPERATING THE UNIT SAFELY AND CORRECTLY 6
SAFE USE & MAINTENANCE OF PROPANE GAS CYLINDERS 7
INSTALLATION REQUIREMENTS 11
OVERHEAD CONSTRUCTION AND EXHAUST HOOD REQUIREMENTS 11
REAR WALL CLEARANCES 12
COMBUSTION AIR AND COOLING AIRFLOW 13
DIAGRAMMATICAL REPRESENTATIONS OF OUTDOOR AREAS 14
ELECTRICAL SAFETY 15
MODEL SPECIFICATIONS 16
STAND-ALONE GRILL WIRING DIAGRAM 18
ECHELON GRILL REPLACEMENT COMMON PARTS LIST 19
SINGLE SIDEBURNER UNIQUE PARTS LIST (62 SERIES) 21
DOUBLE SIDEBURNER UNIQUE PARTS LIST (71 SERIES) 22
POWER BURNER UNIQUE PARTS LIST (51 SERIES) 23

INSTALLATION

INSTALLATION 24
LOCATION PREPARATION 24
WHEELS AND CASTERS 24
INSTALL TOOL HOLDER AND PAPERTOWEL HOLDER 24
CONNECT GAS SUPPLY 25
LEAK TEST 26
INSTALL FLAVOR GRIDS 26
INSTALL COOKING GRIDS 27
INSTALL DRIP TRAY 27
INSTALL WARMING RACK 28
INSTALL SIDEBURNER SHELF (if equipped) 28
CONNECT POWER SUPPLY TO LINE POWER 29
OPERATION TEST 29

USE, CARE, & SERVICE

IDENTIFICATION OF GRILL CONTROLS 30
USING THE GRILL 31
LIGHTING (IGNITION) INSTRUCTIONS 33
ELECTRONIC LIGHTING 33
MANUAL LIGHTING 33
SHUTTING OFF THE UNIT 33
ROTISSERIE INSTRUCTIONS 34
USING THE FOLDING SHELF 35
PAPER TOWEL HOLDER 35
REMOVING DRAWERS 35
OPTIONAL POWER BURNER 36
OPTIONAL INFRARED BURNER OPERATION 37
CHARCOAL/SMOKER BASKET (IF EQUIPPED) 38
SERVICING AND CLEANING 40
CLEANING YOUR GRILL 40
REPLACING HALOGEN BULBS 42
CONTROL PANEL REMOVAL 43
MAIN BURNER REMOVAL 44
INFRARED BURNER REMOVAL (if equipped) 44
POWER BURNER INTERIOR PROTECTION PLATE REMOVAL (if equipped) 45
POWER BURNER FLAME COLLIMATOR REMOVAL (if equipped) 45
POWER BURNER REMOVAL (if equipped) 45
POWER SUPPLY FUSE REPLACEMENT 46
CONVERT GAS TYPE / CHECK BURNER ORIFICES 47
AIR SHUTTER ADJUSTMENT / BURNER FLAME INSPECTION 51
VALVE "LOW" SETTING ADJUSTMENT 55
NOTES PAGE 56
TROUBLESHOOTING 57
WARRANTY 58

⚠ AVERTISSEMENTS

Avertissements généraux :

- Ce barbecue est pour ultilisation à l'extérieur seulement. Si l'appareil est entreposé à l'intérieur, enlever les bouteilles et les laisser à l'extérieur.
- Ne pas ranger le gril immédiatement aprés l'avoir utilisé. le laisser refroidir avant de le déplacer ou de la ranger. Le non respect de cette mesure de sécurité pourrait entraîner un incendie causant des dommages à la propriété, des blessures ou la mort.
- Ne pas utiliser cet appareil sous une surface combustible.
- Ne pas utiliser cet appareil sous un auvent. Le non respect de cette mesure de sécurité pourrait entraîner un incendie ou des blessures.
- Dégagement minimal entre les parois latérales et l'arriére de l'appareil et la construction combustible (45.7 cm à partir des parois latérales et 45.7cm à partir de l'arriére).
- Le régulareur de pression de gaz prévu avec cet appareil de cuisson à gaz pour l'extérieur doit être utilisé. Ce régulateur est réglé pour une pression de sortie de 5 pouces de colonne de l'eau pour le gaz naturel, et 10 pouces pour le propane.
- LE RÉGULATEUR INCLUS D'APPAREILS EST ÉVALUÉ POUR LE MAXIMUM DE 1/2 (LIVRES PAR POUCE CARRÉ). SI VOTRE OFFRE DE GAZ EST 1/2 PLUS GRAND QUE (LIVRES PAR POUCE CARRÉ), UN RÉGULATEUR ADDITIONNEL DOIT ÊTRE INSTALLÉ AVANT LE BARBECUE. VOIR LA SECTION DE CONDITIONS D'OFFRE DE GAZ POUR LA PRESSION APPROPRIÉE D'OFFRE DE GAZ.
- Ne couvrez jamais la surface entière de cuisine ou de gril de gauffreuses ou de casseroles. La surchauffe se produira et les brûleurs ne seront pas très performants quand la chaleur de combustion est emprisonnée au-dessous de la surface à cuire.
- Ne pulvérisez jamais l'eau sur une unité chaude de gaz, comme ceci peut endommager des composants de porcelaine ou de fer de fonte.

Avertissements de propane :

- Une fuite de GPL peut causer une incendie ou une explosion si enflammée entraînant des blessures corporelles graves ou la mort.
- Communiquez avec le fournisseur de GPL pour les réparations ou pour disposer de qules bouteille ou du GPL non utilisé.

INSTALLATION, OPERATION, AND SAFETY INFORMATION

1. Wear gloves and use extreme caution whenever installing and handling this product and its accessories as certain components have sharp edges that can cause personal injury.
2. The outdoor appliance and surrounding area MUST remain clear of flammable substances such as gasoline, yard debris, wood, etc. Maintain a minimum horizontal clearance of 18" (in all directions) from combustible materials/items.
3. Do not block the 1" front air inlet along the bottom of the control panel. See the COMBUSTION AIR AND COOLING AIRFLOW section under INSTALLATION REQUIREMENTS for details.
4. **This unit must be installed so that the vent openings on the cabinet remain clear and free at all times. See the GAS SAFETY INFORMATION section.**
5. **When using propane gas: the propane cylinder, regulator, and rubber hose must be in a location not subject to temperatures above 125° F (51° C).**
6. The back burner cover, sideburner, or infrared burner cover (if equipped) must be removed before using the burner.
7. Before each use, ensure the flames on each burner burn evenly along the entire burner with a steady flame (mostly blue). If burner flames are not normal, check and clean the orifice and burner/venturi tubes for insects and insect nests. A clogged tube can lead to a fire beneath the unit. A proper flame pattern will ensure safe operation and optimal performance. Adjust the air shutter as needed to achieve proper flame pattern (see AIR SHUTTER ADJUSTMENT/BURNER FLAME INSPECTION section, under SERVICING AND CLEANING for details).
8. The in-line gas valve or gas cylinder valve must always be shut OFF when the unit is not in use.
9. Whenever reconnecting any wires, apply a small amount of dielectric grease to the male connector, then make the connection. This will ensure conductivity and prevent moisture from affecting the contact.
10. **Adults MUST be present when this gas appliance is operating. This appliance MUST NOT be left burning when unattended.**
11. **Do not store combustible materials in the enclosure directly beneath the appliance.**

⚠ WARNING

NEVER cover slots, holes, or passages in the oven bottom or cover an entire rack with material such as aluminum foil. Doing so blocks air flow through the oven and may cause carbon monoxide poisoning.

Aluminum foil linings may trap heat causing a fire hazard.

IMPORTANT: IN THE EVENT OF A GREASE FIRE, IMMEDIATELY SHUT OFF THE MAIN GAS VALVE TO THE UNIT. KEEP THE LID OPEN AND ALLOW THE FIRE TO EXTINGUISH ITSELF. KEEP AT A SAFE DISTANCE. A THOROUGH INSPECTION BY A QUALIFIED PROFESSIONAL SERVICE TECHNICIAN SHOULD BE CONDUCTED BEFORE FUTURE USE OF YOUR UNIT. THE SERVICE TECHNICIAN WILL CHECK THE SYSTEM FOR GAS LEAKS AND WILL CHECK ALL ELECTRICAL WIRING FOR DAMAGE. ALL GAS LEAKS AND WIRING MUST BE REPAIRED PRIOR TO FUTURE USE.

WARNING: NEVER cover more than 75% of the cooking or grill surface with griddles, pots, or pans. Overheating will occur, and burners will not perform properly when combustion heat is trapped below the cooking surface.

The unit serial number tag can be found affixed to the grill body behind the control panel (on an aluminum tag) and on the underside of the drip tray handle (on a thermal label). It is recommended that the drip tray first be removed and cleaned / emptied of its contents, then turned over to view. The unit rating label is located inside of the control panel.

ELECTRICAL CONNECTIONS

A **120VAC (15 AMP minimum) GFCI GROUNDED three-wire receptacle** (not included) is required within the vicinity of the unit to provide power to it. The GFCI receptacle must be a WEATHER-PROOF IN-USE COVERED RECEPTACLE.

- **Observe the National Electric Code and all local codes.**
- **Verify proper polarity of the receptacle.**
- **If an extension cord is used, ensure it is a three-wire GROUNDED cord that is rated for the power of the equipment, and is approved for outdoor use with a W-A marking. DO NOT use two-prong adapters.**
- **DO NOT TAMPER WITH THE EXTENSION CORD OR THE UNIT POWER-SUPPLY CORD.**

Important: ONLY REPLACE THE INTERIOR OVEN LIGHTS WITH 12V / 10 WATT HALOGEN BULB(S).

GAS SAFETY INFORMATION

WHEN OPERATING THIS GAS APPLIANCE, ALL INSTRUCTIONS AND WARNINGS MUST BE OBSERVED. FAILURE TO DO SO MAY RESULT IN A FIRE OR EXPLOSION CAUSING PROPERTY DAMAGE, BODILY INJURY, OR DEATH.

WARNING

This appliance MUST be installed and operated according to the information below.

FAILURE TO PROPERLY VENT THE CABINET MAY RESULT IN A FIRE OR EXPLOSION CAUSING PROPERTY DAMAGE, BODILY INJURY, OR DEATH.

A leaking gas connection or valve unintentionally left open will create a hazard.

WHEN USING PROPANE GAS

- **Propane gas** (also known as **L.P. gas**) is heavier than air and will accumulate or pool in an inadequately vented enclosure or recessed area.
- If a pool of **propane gas** is ignited, an explosion will occur. Adequate venting at the floor level of the cabinet eliminates this danger.
- DO NOT store a spare propane-gas cylinder in or near the unit.

WHEN USING NATURAL GAS

- **Natural gas** is lighter than air and will accumulate at the top of an inadequately vented enclosure.
- If an accumulation of **natural gas** is ignited, an explosion will occur. Adequate venting at the top of the cabinet eliminates this danger.

INSTALLATION SAFETY GUIDELINES

THIS UNIT MUST BE INSTALLED SO THAT THE VENT OPENINGS ON THE CABINET REMAIN CLEAR AND FREE AT ALL TIMES.

The gas cylinder, regulator, and rubber hose must be in a location not subject to temperatures above 125° F (51° C).

IF A PROPANE CYLINDER IS INSTALLED INSIDE OF THE CABINET, THE GUIDELINES FOUND IN THE **SAFE USE & MAINTENANCE OF PROPANE GAS CYLINDERS** SECTION MUST BE FOLLOWED.

OPERATING THE UNIT SAFELY AND CORRECTLY

Every time you use the unit, **make sure that:**

1. The area around the unit is clear and free from combustible materials, gasoline and flammable vapours and liquids.
2. There is no blockage of the airflow through the vent openings located on the cabinet.
3. The hose is inspected (if applicable). See SAFE USE & MAINTENANCE OF PROPANE-GAS CYLINDERS section.

DO NOT store any combustible materials, gasoline, and any other flammable vapours/liquids in the vicinity of the unit. Provide adequate clearance for servicing and operation.

SAFE USE & MAINTENANCE OF PROPANE GAS CYLINDERS

IMPORTANT FOR YOUR SAFETY
READ AND FOLLOW ALL WARNINGS PROVIDED WITH THE PROPANE-GAS CYLINDER.
When operating this appliance with a propane-gas cylinder, these instructions and warnings **MUST** be observed.
FAILURE TO DO SO MAY RESULT IN A SERIOUS FIRE OR EXPLOSION.

CYLINDER/CONNECTOR REQUIREMENTS

a. Propane-gas cylinders, valves, and hoses must be maintained in good condition and inspected before each use of appliance. They must be replaced if there is any visible damage. If hose is cut or shows excessive abrasion or wear, it must be replaced before using appliance (see **e**.).

b. This unit, when used with a cylinder, should be connected to a standard 5-gallon (20 lb.) propane-gas cylinder equipped with a listed overfilling prevention device. The device has been required on all cylinders sold since October 1,1998, to prevent overfilling.

c. Cylinder dimensions should be approximately 12" (30.5 cm) in diameter and 18" (45.7 cm) high. Cylinders must be constructed and marked in accordance with the U.S. Department of Transportation (D.O.T.) *Specifications for LP-Gas Cylinders,* or the Standard for *Cylinders, Spheres, and Tubes for Transportation of Dangerous Goods and Commission,* CAN/CSA-B339, as applicable.

d. The cylinder used must include a collar to protect the cylinder valve. The cylinder supply system must be arranged for vapour withdrawal. See Fig. 7-1.

e. When used with a cylinder, the gas supply system must be used with a pressure regulator. The pressure regulator and hose assembly (Fig. 7-1) supplied with this outdoor gas appliance **(L.P. models only)** must be used. Original and replacement pressure regulator and hose assemblies must be those specified by the manufacturer for connection with a cylinder connecting device identified as Type I by the ANSI Z 21.58/CGA 1.6 and must comply with UL 144 as a part of the self-contained LP gas supply system (see PARTS LIST for ordering information).

f. The propane-gas cylinder valve must be equipped with a cylinder connection device, described as Type I in the standard defined in paragraph **e**. above. This device is commonly described as an Acme thread coupler.

g. If the cylinder comes with a dust plug, place it on the cylinder valve outlet whenever the cylinder is not in use. Only install the type of dust cap on the cylinder valve outlet that is provided with the cylinder valve. Other types of caps or plugs may result in leakage of propane.

COUPLER OPERATION

To connect the regulator/hose assembly to the propane-gas cylinder valve fitting: Press the hand nut on the regulator over the Acme thread fitting on the cylinder valve. Turn the hand nut clockwise to engage the threads and tighten until snug. The use of pliers or a wrench should not be necessary. Only cylinders marked “propane” may be used.

To disconnect: Turn the hand nut counterclockwise until detached (Fig. 7-1).

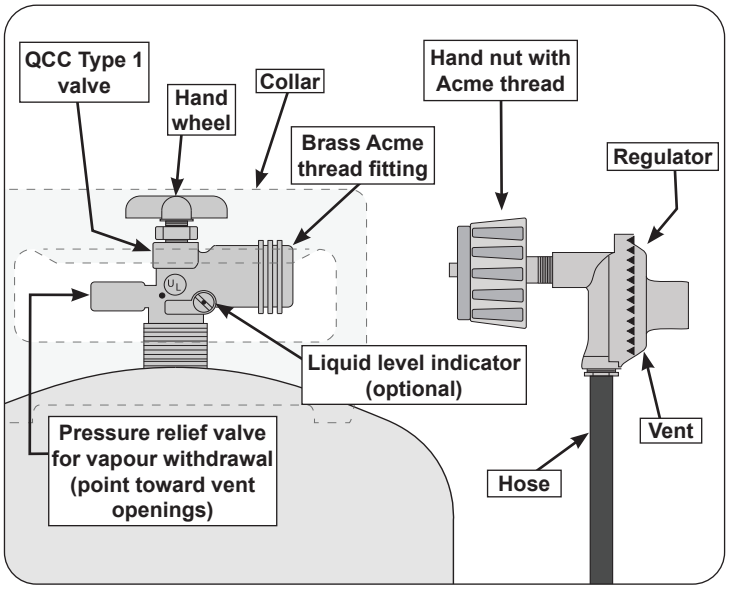

Fig. 7-1 Type I Acme thread coupler

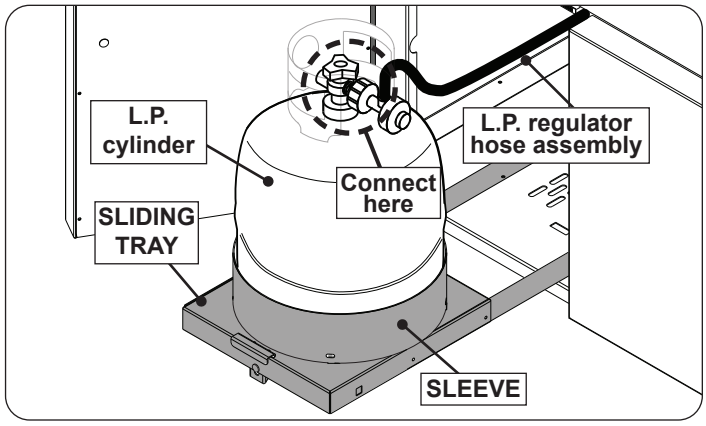

Fig. 7-2 Place and connect cylinder

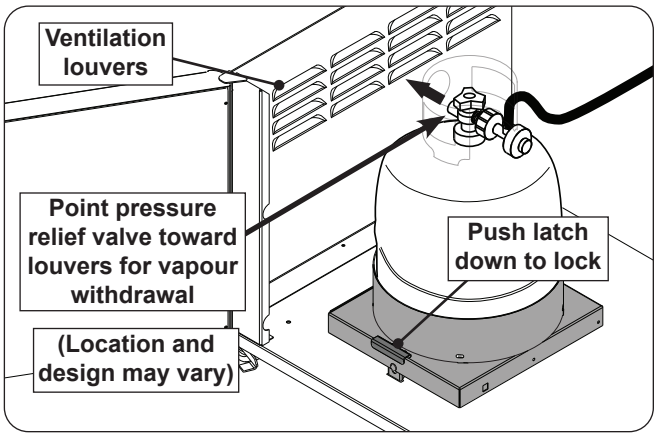

Fig. 7-3 Position cylinder and secure tray

UTILISATION SÛRE ET ENTRETIEN DES CYLINDRES DE GAZ DE PROPANE

IMPORTANT POUR VOTRE SÛRETÉ

LISEZ ET SUIVEZ TOUS LES AVERTISSEMENTS ÉQUIPÉS DE VOTRE CYLINDRE DE GAZ DE PROPANE.

En actionnant cet appareil avec un cylindre de gaz de propane ON DOIT observer ces instructions et avertissements.

LE MANQUE DE FAIRE AINSI PEUT AVOIR COMME CONSÉQUENCE UNE INCENDIE OU UNE EXPLOSION SÉRIEUSE.

CYLINDRE ET CONDITIONS ET CARACTÉRISTIQUES DE CONNECTEUR

a. Les bouteilles, les vannes et les tuyaux de propane doivent être entretenus et inspectés avant chaque utilisation. Ils doivent être remplacés en cas de dommages visibles. Si le tuyau est coupé ou présente des signes d'abrasion ou d'usure, il doit être remplacé avant utilisation (**voir e.**).

b. Cette unité, lorsqu'elle est utilisée avec une bouteille, doit être connectée à une bouteille standard de gaz propane de 5 gallons (20 lb) équipée d'un dispositif anti-débordement répertorié. L'appareil est obligatoire sur toutes les bouteilles vendues depuis le 1er octobre 1998 afin d'empêcher tout remplissage excessif.

c. Les dimensions du cylindre doivent être d'environ 12 " (30,5 cm) de diamètre et 18" (45,7 cm) de hauteur. Les bouteilles doivent être construites et marquées conformément aux spécifications du ministère des Transports (DOT) pour les bouteilles à gaz LP ou à la norme relative aux bouteilles, sphères et tubes pour le transport des marchandises dangereuses et à la Commission, CAN / CSA-B339, selon le cas.

d. La bouteille utilisée doit comporter un collier pour protéger le robinet de la bouteille. Le système d'alimentation de la bouteille doit être conçu pour le retrait de la vapeur. Voir Fig. 8-1.

e. Lorsqu'il est utilisé avec une bouteille, le système d'alimentation en gaz doit être utilisé avec un régulateur de pression. Le montage du régulateur de pression et le flexible (Fig. 8-1) fourni avec cet appareil au gaz en plein air **(modèles au propane seulement)** doit être utilisé. Les régulateurs de pression d'origine et de remplacement et les ensembles de tuyaux doivent être ceux spécifiés par le fabricant pour la connexion avec un dispositif de connexion de bouteille identifié comme Type I par l'ANSI Z 21.58/CGA 1.6 et doivent être conformes à UL 144 en tant que partie du gaz propane autonome système d'alimentation (voir la liste des pièces pour les informations de commande).

f. La valve de cylindre de gaz de propane doit être équipée d'un dispositif d'accouplement de raccordement de cylindre, décrit comme type I dans la norme définie dans le e. de paragraphe ci-dessus. Ce dispositif est généralement décrit comme coupleur de fil de point culminant.

g. Si la bouteille est livrée avec un bouchon anti-poussière, placez-le sur la sortie du robinet de la bouteille chaque fois que la bouteille n'est pas utilisée. Installez uniquement le type de capuchon anti-poussière sur la sortie du robinet de la bouteille qui est fourni avec le robinet de la bouteille. D'autres types de bouchons ou de bouchons peuvent entraîner des fuites de propane.

OPÉRATION DE COUPLEUR

Pour relier le regulator/hose à l'ajustage de précision de valve de cylindre de gaz de propane: Serrez l'écrou de main sur le régulateur au-dessus de l'ajustage de précision de fil de point culminant sur la valve de cylindre. Tournez l'écrou de main dans le sens des aiguilles d'une montre pour engager les fils et pour serrer jusqu'à ce que douillettement. L'utilisation des pinces ou de la clé ne devrait pas être nécessaire. Seulement le "propane" marqué par cylindres doit être employé.

Pour déconnecter: tournez l'écrou à main dans le sens antihoraire jusqu'à ce qu'il soit détaché (Fig. 8-1)

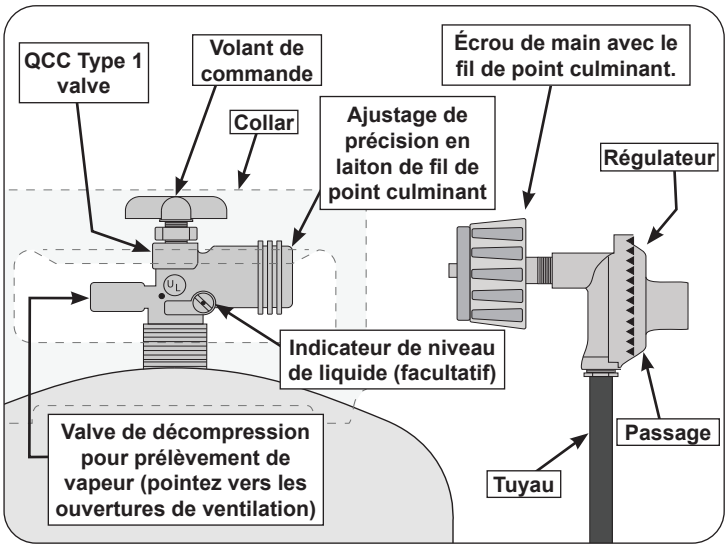

Fig. 8-1 Type coupleur de fil de point culminant d'I

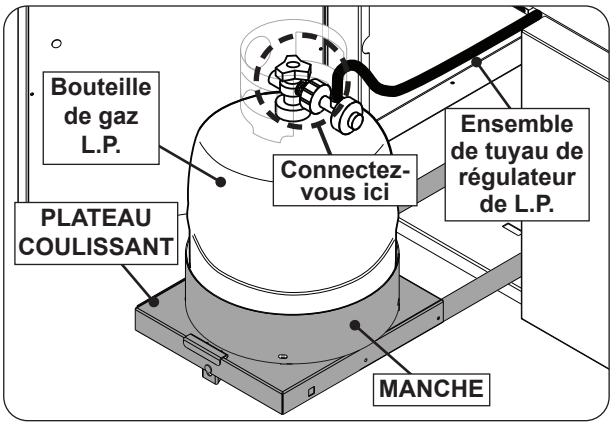

Fig. 8-2 Placer et connecter le cylindre

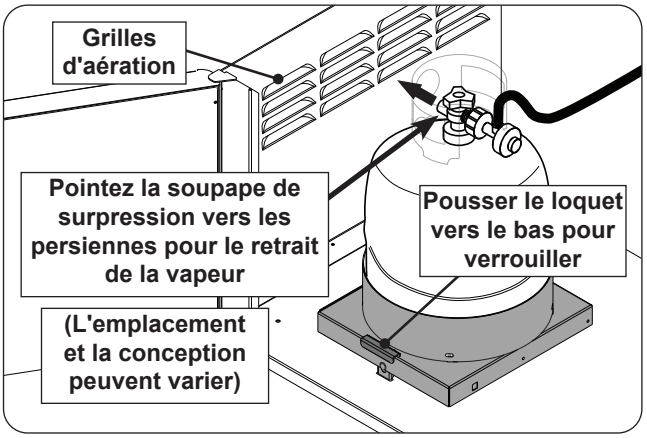

Fig. 8-3 Positionner le cylindre et sécuriser le plateau

Important: Before using the unit, and after each time the cylinder is removed and reattached, check the hose for wear (see **a**.) and check all connections for leaks. Turn off the unit valves and open the main cylinder valve, then check connections with soapy water. Repair any leaks before lighting the unit.

CAUTION: Always turn the propane cylinder main valve off after each use, and before moving the unit and cylinder or disconnecting the coupling. This valve must remain closed and the cylinder disconnected while the appliance is not in use, even though the gas flow is stopped by a safety feature when the coupler is disconnected.

Carefully inspect the hose assembly each time before the gas is turned on. A cracked or frayed hose must be replaced immediately.

If the appliance is stored indoors, the cylinder must be disconnected and removed. Disconnected cylinders must be stored outdoors, out of the reach of children, with threaded valve plugs tightly installed, and must not be stored in a building, garage, or any other enclosed area.

FOR YOUR SAFETY

A. DO NOT store a spare propane-gas cylinder under or near this appliance.

B. NEVER fill the cylinder beyond 80-percent full.

C. IF THE INFORMATION IN **a.** AND **b.** IS NOT FOLLOWED EXACTLY, A FIRE CAUSING DEATH OR SERIOUS INJURY MAY OCCUR.

D. **CGA 791 connections on LP gas cylinders:** The cylinder face elastomeric face seal element on these devices could, over time, show marked and visible damage or deterioration that might cause a leak even with the connection tightened. A visual inspection for the seal must be carried out every time a LP gas cylinder is replaced or refilled. Any LP gas cylinder showing signs of damage or deterioration as illustrated in Fig. 9-1, including visible cracks and pitting, must be replaced.

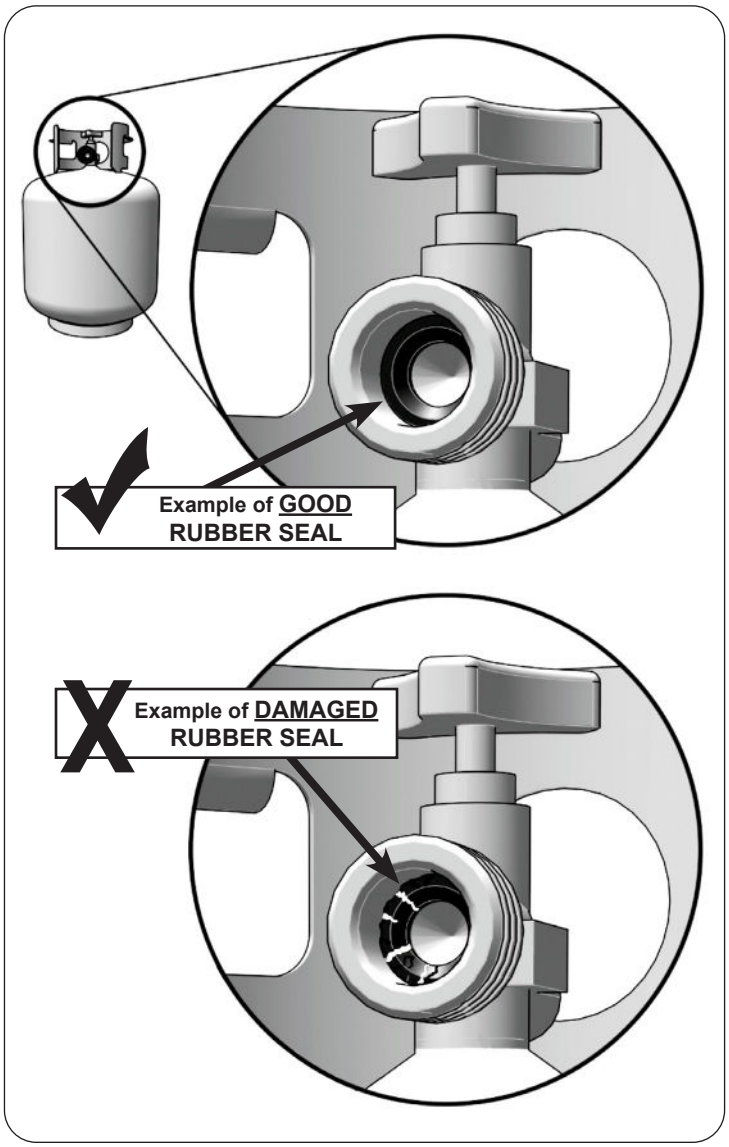

Fig. 9-1 Inspect rubber seal

Important: Avant d'employer le unité, et ensuite chaque fois que le cylindre est enlevé et rattaché, examinez tous les raccordements pour déceler les fuites. Arrêtez les valves de unité et ouvrez la valve principale de cylindre, puis vérifiez les raccordements avec de l'eau savonneux. Réparez toutes les fuites avant d'allumer le unité.

ATTENTION: Tournez toujours la valve principale de cylindre de propane au loin après chaque utilisation, et avant de déplacer le unité et le cylindre, ou débrancher l'accouplement. Cette valve doit rester fermée et le cylindre a débranché alors que l'appareil n'est pas en service, quoique l'écoulement de gaz soit arrêté par un dispositif de sûreté quand le coupleur est débranché.

Inspectez soigneusement l'ensemble de tuyau chaque fois avant que le gaz soit allumé. Un tuyau fissuré ou effiloché doit être immédiatement remplacé.

Si l'appareil est stocké à l'intérieur, le cylindre doit être disconnected et a enlevé. Des cylindres Disconnected doivent être stockés dehors, hors de la portée des enfants, avec les prises de valve filetées étroitement installées, et ne doivent pas être stockés dans un bâtiment, le garage, ou n'importe quel autre secteur inclus.

POUR VOTRE SÛRETÉ

a. Ne stockez pas un cylindre de gaz disponible de propane dessous ou ne vous approchez pas de cet appareil.

b. Ne remplissez jamais cylindre au delà de 80 pour cent de plein.

c. SI L'INFORMATION DANS "A" ET "B" N'EST PAS SUIVIE EXACTEMENT, UN FEU CAUSANT LA MORT OU DES DOMMAGES SÉRIEUX PEUT SE PRODUIRE.

d. **Connexions CGA 791 sur les bouteilles de GPL :** l'élément d'étanchéité en élastomère de la face de la bouteille de ces appareils peut, au fil du temps, présenter des dommages ou une détérioration marqués et visibles susceptibles de provoquer une fuite même avec la connexion serrée. Une inspection visuelle du joint doit être effectuée chaque fois qu'une bouteille de GPL est remplacée ou remplie. Toute bouteille de GPL présentant des signes de dommages ou de détérioration, tel qu'illustré à la Fig. 10-1, y compris des fissures et des piqûres visibles, doit être remplacée.

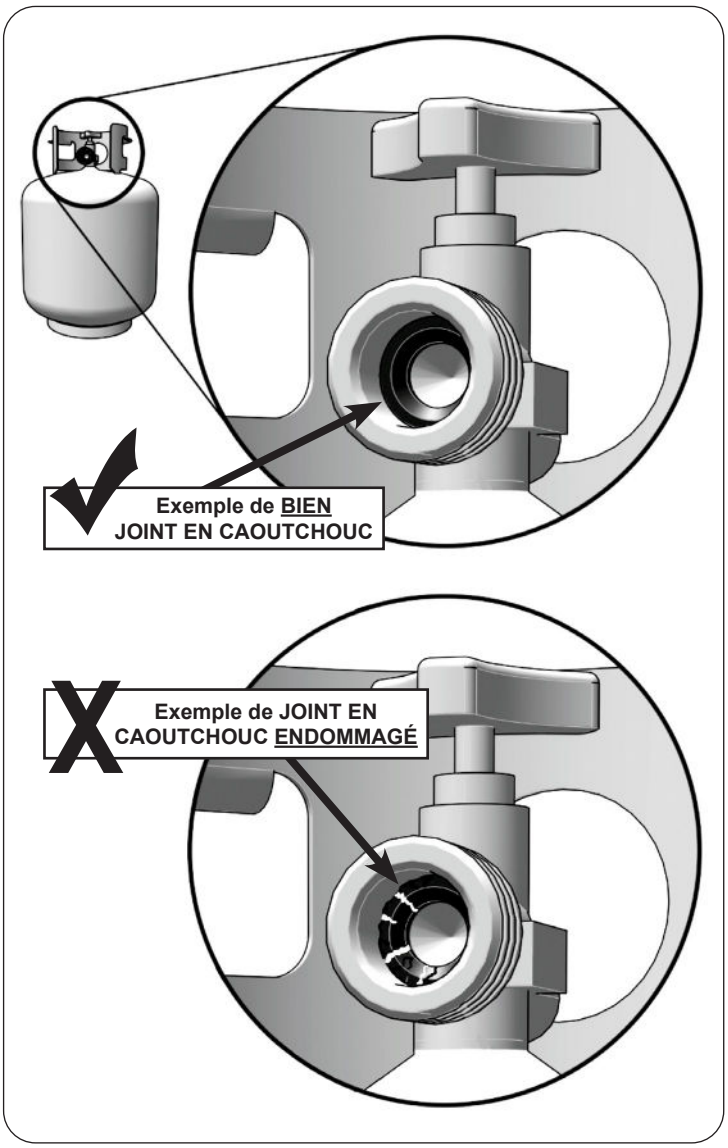

Fig. 10-1 Inspecter le joint en caoutchouc

INSTALLATION REQUIREMENTS

Installation must be performed by a qualified professional service technician.

This unit is designed for outdoor use only. **DO NOT** use this unit inside a building, garage, or enclosed area. **DO NOT** install this unit in or on a recreational vehicle or boat.

Any constructed outdoor area in which the appliance is used shall comply with one of the following:

- An outdoor area with walls on three sides, and no overhead cover
- Within a partial outdoor area that includes an overhead cover and no more than two walls. The sidewalls may be parallel, as in a breezeway, or at right angles to each other
- Within a partial outdoor area that includes an overhead cover with walls on three sides, and at least 30% or more of the horizontal periphery of the enclosure that is open and unrestricted

Note: All openings must be permanently open.

Note: Sliding doors, garage doors, windows, or screened openings are not considered as permanent openings.

Refer to DIAGRAMMATICAL REPRESENTATIONS OF OUTDOOR AREAS section.

OVERHEAD CONSTRUCTION AND EXHAUST HOOD REQUIREMENTS

When installed under combustible overhead construction, the area above the cooking surface of the unit **must** be covered with an exhaust hood. The exhaust hood provides the protection for the combustible overhead construction. See exhaust hood information below and Fig. 11-1.

Important: DO NOT use this appliance under unprotected combustible overhead construction.

When installed under overhead non-combustible construction, an exhaust hood is highly recommended; see exhaust hood information below and Fig. 11-1.

Exhaust Hood

When using an exhaust hood, the area above the cooking surface of the grill must be covered with a hood larger than the cooking area of the grill, and with a minimum of 1200 CFM (cubic feet per minute) rated exhaust fan for proper outdoor application.

Fire Magic vent hoods, spacers, and duct covers are available. They meet all requirements. See Table 3. Contact your local dealer.

- For custom spacers, they **must be constructed entirely of non-combustible material only.**
- For custom soffits, they may be constructed of wood, metal framing, etc.

Clearances

A minimum 5 foot clearance is required between the cooking surface and the overhead construction. (No combustible materials are allowed within this area.)

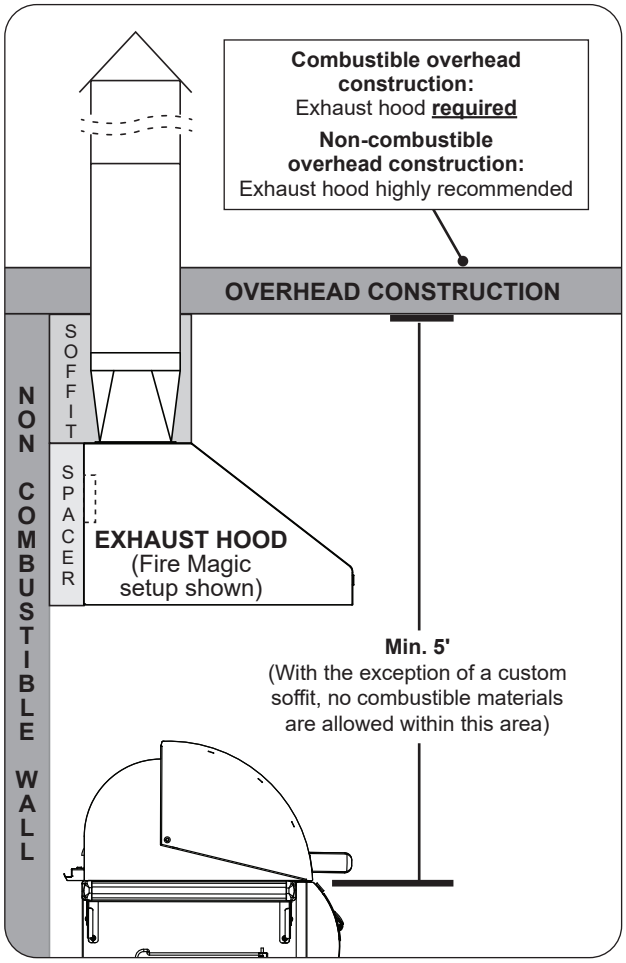

Fig. 11-1 Overhead requirements

REAR WALL CLEARANCES

For the minimum clearances between the unit and rear walls, your setup must fall within one (or more) of the following:

A. Clearance between unit and strictly non-combustible rear wall

(i.e. brick wall, see Fig. 12-1)

- The unit must have a minimum clearance of 4" from the non-combustible rear wall.

  (To allow for proper ventilation and prevent dangerous overheating.)

B. Clearance between unit and a protected combustible rear wall

(i.e. a non-combustible wall in front of a combustible wall to serve as a barrier. This can be accomplished by brick, or a metal stud finished with non-combustible substrate, see Fig. 12-2)

- The unit must have a minimum clearance of 14" from the protected combustible rear wall.

  (The 4" non-combustible material plus an additional 10" clearance between the unit and protected rear wall.)

C. Clearance between unit and combustible rear wall

- The unit must have a minimum clearance of 18" from the combustible rear wall (see Fig. 12-3).

SIDE / CORNER WALL CLEARANCES (if applicable)

The unit must have a minimum clearance of 24" from any side walls (to account for variables in airflow that could affect performance). See Fig. 12-4.

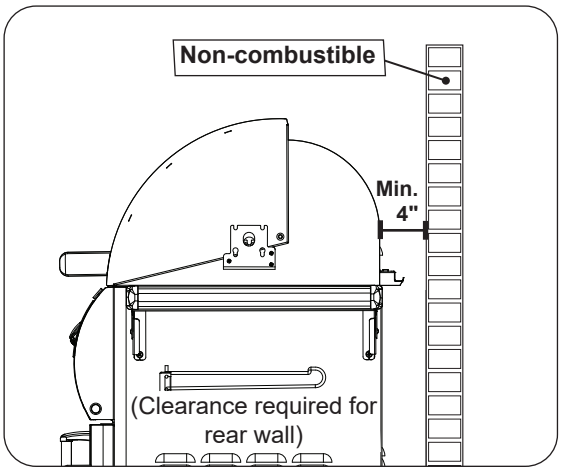

Fig. 12-1 Clearance **'A'** Diagram

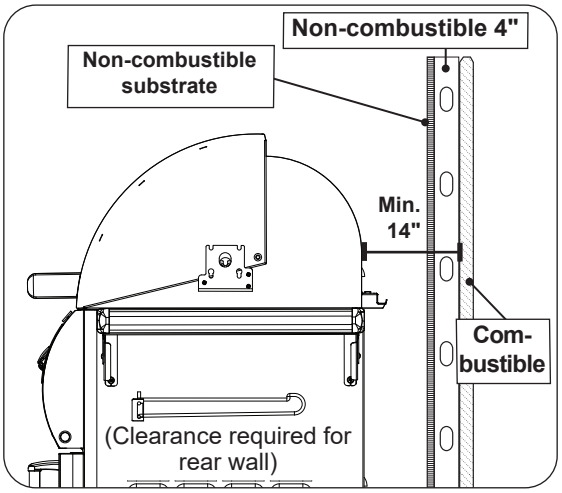

Fig. 12-2 Clearance **'B'** Diagram

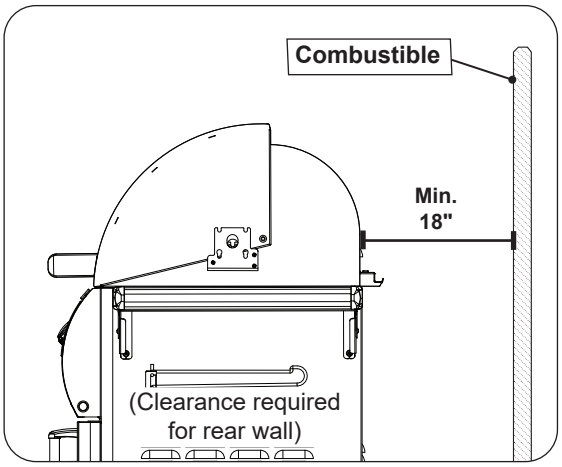

Fig. 12-3 Clearance **'C'** Diagram

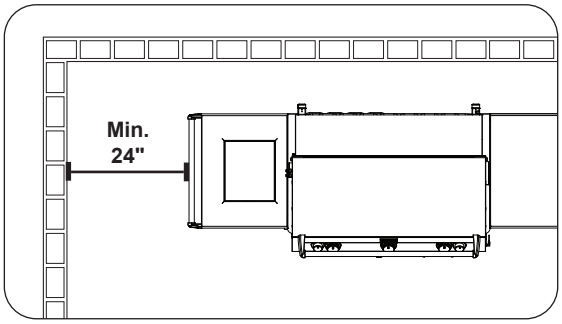

Fig. 12-4 Side/corner wall clearance

The control panel MUST remain removable for servicing (see CONTROL PANEL REMOVAL section).

COMBUSTION AIR AND COOLING AIRFLOW

Proper airflow (front-to-back, Fig. 13-1) MUST be maintained for the unit to perform as it was designed. If airflow is blocked, overheating and poor combustion will result. Do not block the 1" front air inlet along the bottom of the control panel.

CAUTION: Wind blowing into or across the rear oven lid vent (Fig. 13-3) can cause poor performance and/or dangerous overheating. Orient the grill so that the prevailing wind blows toward the front of the grill (Fig. 13-2). **A wind deflector is available for purchase to assist in proper airflow during windy conditions.** See Table 3 for model numbers. Follow the instructions included with the wind deflector for installation.

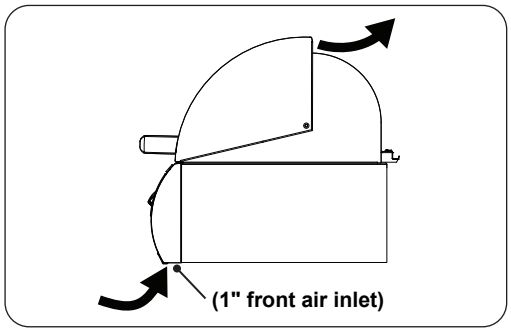

Fig. 13-1 Airflow diagram

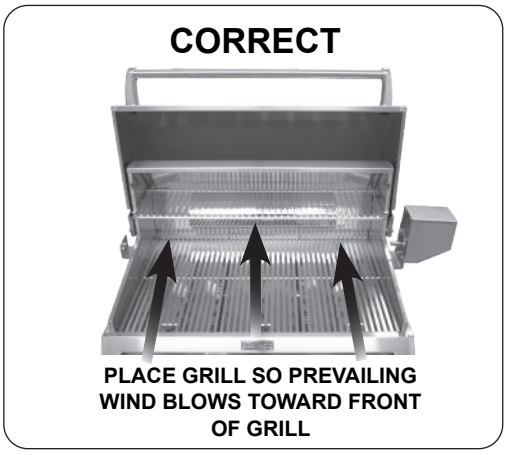

Fig. 13-2 Airflow direction - CORRECT

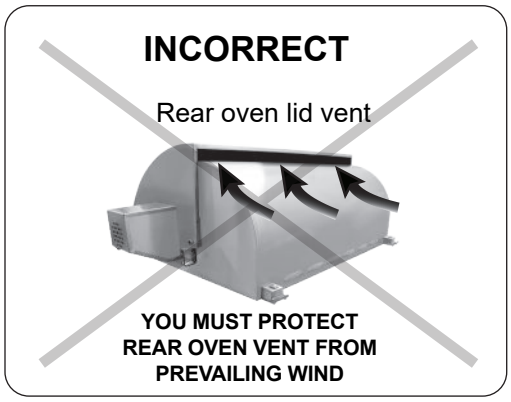

Fig. 13-3 Airflow direction - INCORRECT

GAS-SUPPLY PLUMBING REQUIREMENTS

The gas supply is to be brought up near/behind the unit. Your individual installation may vary. **Observe the National Fuel Gas Code and all local codes. Leak test at all connections.**

The gas supply must be sized to provide minimum inlet pressure at the maximum flow rate (BTU/hr). Undue pressure loss will occur if the pipe is too small, or the run is too long. Gas supply pipe must be ½" minimum interior diameter. If the gas line is longer than 20', a larger diameter line may be necessary. Refer to the NFPA 54 guidelines for further details.

Any rigid pipe gas line MUST stop outside of and near the unit. It CANNOT be routed inside the cabinet of the unit. The use of any rigid pipe, semi-rigid tubing, and connectors must comply with the Standard for *Connectors for Outdoor Gas Appliances and Manufactured Homes*, ANSI Z21. 75 (CSA 6.27). For natural gas models, a quick disconnect hose is included and pre-installed to the valve manifold, and routes out of the cabinet. For household propane, an appropriate, C.S.A. approved, flexible hose or similar MUST be purchased to route from the unit valve manifold out to the gas line. The R.H.P. quick disconnect hose is recommended, and is discussed and illustrated in this manual (see INSTALLATION and PARTS LIST sections). Contact your dealer for ordering information. (If your household propane setup varies from what is shown, **observe the National Fuel Gas Code and all local codes.**)

Use a pipe joint compound resistant to all gasses on all NPT pipe fittings. Make sure to tighten every fitting securely. **Do not use pipe joint compound to connect flare fittings.**

Important: A shut-off valve (not included) in the gas supply line is required. It must be installed within 6 feet of the unit and must be easily accessible. Use a pipe joint compound resistant to all gasses on all NPT pipe fittings **except flare fittings**. Refer to NFPA 54 guidelines for further details.

GAS SUPPLY AND MANIFOLD PRESSURES:

For **natural gas** - normal 7" water column (w.c.), minimum 5", maximum 10 $^1/_2$". For **propane gas** - normal 11" w.c., minimum 10", maximum 13".

Note: An additional regulator may be needed to meet these requirements.

Note: A sediment trap in the gas supply line is recommended where applicable. It should be installed downstream of the shut-off valve as close to the unit as possible. Refer to NFPA 54 guidelines for further details.

DIAGRAMMATICAL REPRESENTATIONS OF OUTDOOR AREAS

The following figures are diagrammatical representations of outdoor areas, as defined in Clause 4.25.3. See INSTALLATION REQUIREMENTS section.

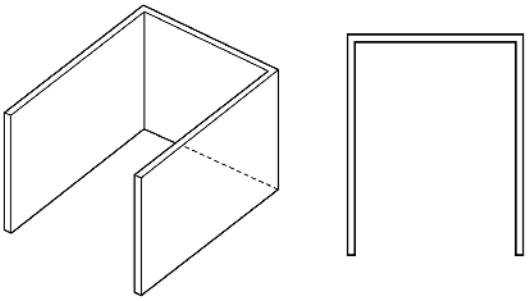

Fig. 14-1 Outdoor area - Example 1

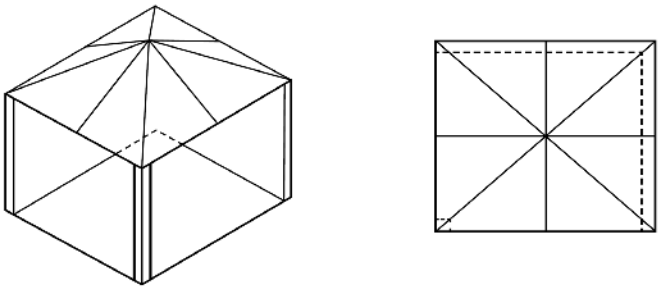

Fig. 14-2 Outdoor area - Example 2

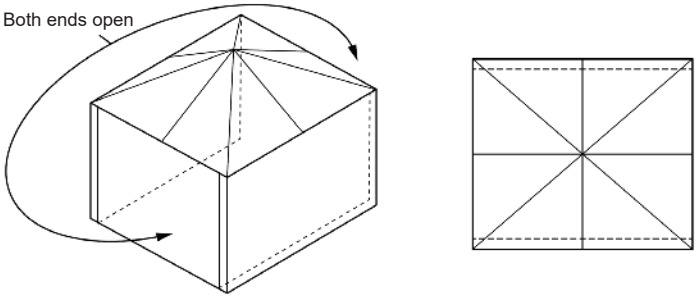

Fig. 14-3 Outdoor area - Example 3

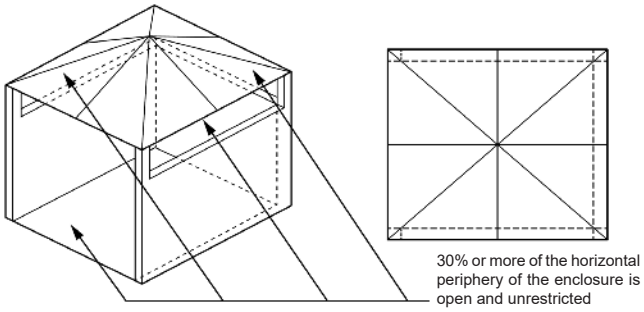

Fig. 14-4 Outdoor area - Example 4

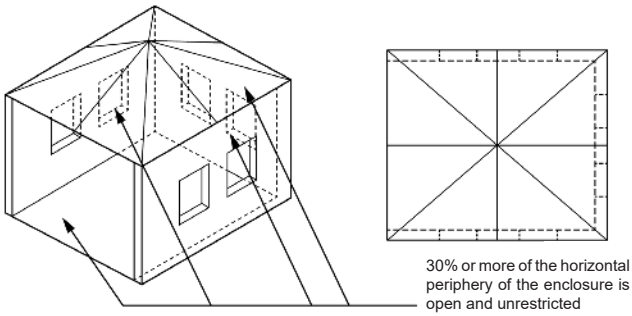

Fig. 14-5 Outdoor area - Example 5

ELECTRICAL SAFETY

- To protect against electric shock, do not immerse cord or plugs in water or other liquid.
- Unplug from the outlet when not in use and before cleaning. Allow to cool before putting on or taking off parts.
- Do not operate any outdoor cooking gas appliance with a damaged cord or plug, or after the appliance malfunctions or has been damaged in any manner. Contact the manufacturer for repair.
- Do not let the cord hang over the edge of a table or touch hot surfaces.
- Do not use an outdoor cooking gas appliance for purposes other than intended.
- When connecting, first connect plug to the outdoor cooking gas appliance then plug appliance into the outlet.
- **Use only a properly wired and inspected 120VAC (15 AMP minimum) Ground Fault Circuit Interrupter (GFCI) GROUNDED three-wire receptacle with this outdoor cooking gas appliance.**
- The GFCI receptacle must be a WEATHER-PROOF IN-USE COVERED RECEPTACLE.
- Never remove the grounding plug or use with an adapter of two prongs.
- Use only extension cords with a three-prong grounding plug, rated for the power of the equipment, and approved for outdoor use with a W-A marking.
- **The provisions of the National Electric Code as well as any local codes must be observed when installing the product.**

MODEL SPECIFICATIONS

		E660s		E790s		E1060s	
		Nat.	L.P.	Nat.	L.P.	Nat.	L.P.
Main burner	Quantity	3	3	3	3	4	4
	Orifice drill size	#42	#54	#38	#53	#40	#53
	Air shutter opening †	3/8"	1/2"	3/8"	1/2"	3/8"	1/2"
Back burner *	Quantity	1	1	1	1	2	2
	Orifice drill size	#53	#63	#51	#57	#53	#63
Single side burner *	Quantity	1	1	1	1	1	1
	Orifice drill size	#50	#58	#50	#58	#50	#58
	Air shutter opening †	1/4"	1/4"	1/4"	1/4"	1/4"	1/4"
Double side burner *	Quantity	2	2	2	2	2	2
	Orifice drill size	#50	#58	#50	#58	#50	#58
	Air shutter opening †	1/4"	1/4"	1/4"	1/4"	1/4"	1/4"
Infrared searing burner *	Quantity	1	1	1	1	1	1
	Orifice drill size	#45	#55	#45	#55	#45	#55
Power burner *	Quantity	-	-	-	-	1	1
	Left orifice drill size Right orifice drill size	-	-	-	-	#30 #46	#50 #1.25
	Left air shutter opening † Right air shutter opening †	-	-	-	-	1/4" 1/4"	3/8" 3/16"
Input electrical requirements		120VAC / 15 AMP minimum / 60 Hz / GFCI outlet					
Appliance rating		12VAC / 140 Watts					
Interior oven lights rating		**12V / 10 watt** halogen light bulb					

* If equipped

† These are air shutter factory settings. These settings may require adjustment due to altitude, or other local conditions. See AIR SHUTTER ADJUSTMENT / BURNER FLAME INSPECTION section.

Table 1 - Product Specifications

	E660s	E790s	E1060s
Wind deflector model # *	23732-20	23745-20	23747-20
Nat to LP conversion kit (for standalone grills) w/ tank tray model # *	25386-21	25386-21	25386-21
Vent hood model # * †	42-VH-7 ‡	48-VH-7 ‡	60-VH-7
Vent hood spacer model # * †	42-VH-7-02 ‡	48-VH-7-02 ‡	60-VH-7-02
Vent hood duct cover model # * †	42-VH-7-DC ‡	48-VH-7-DC ‡	60-VH-7-DC
Burner maintenance kit model # *	MK-1	MK-1	MK-1
Grill complete maintenance kit model # *	MCK-1	MCK-1	MCK-1

* If applicable, not included

† This model meets the minimum requirements; larger models are also acceptable.

Table 2 - Grill Supporting Products

MODEL SPECIFICATIONS (cont.)

Model	Series	Height			Width			Depth	
		Floor to top		Floor to top of shelf (C)	Left to right			Front to back	
						(with shelves)			
		With oven lid OPEN (A)	With oven lid CLOSED (B)		Cart base (D)	Up (E)	1 Up / 1 Down (F)	Cart base (G)	Maximum outer (H)
E660s	w/ or w/o sIngle sideburner	61"	52"	37"	34 1/4"	73 1/2"	59"	26"	30 1/2"
E660s	w/ double sideburner	61"	52"	37"	53 1/8"	92 1/4"	80"	26"	30 1/2"
E790s	w/ or w/o sIngle sideburner	61"	52"	37"	40"	79 1/4"	62 3/4"	26 "	30 1/2"
E790s	w/ double sideburner	61"	52"	37"	58 3/4"	98"	83 3/4"	26"	30 1/2"
E1060s	w/ or w/o sIngle sideburner	61"	52"	37"	53 1/8"	92 1/4"	69 3/4"	26 "	30 1/2"
E1060s	w/ double sideburner or Power burner	61"	52"	37"	77 3/4"	117"	96 3/4"	26"	30 1/2"

Table 3 - Grill Dimensions

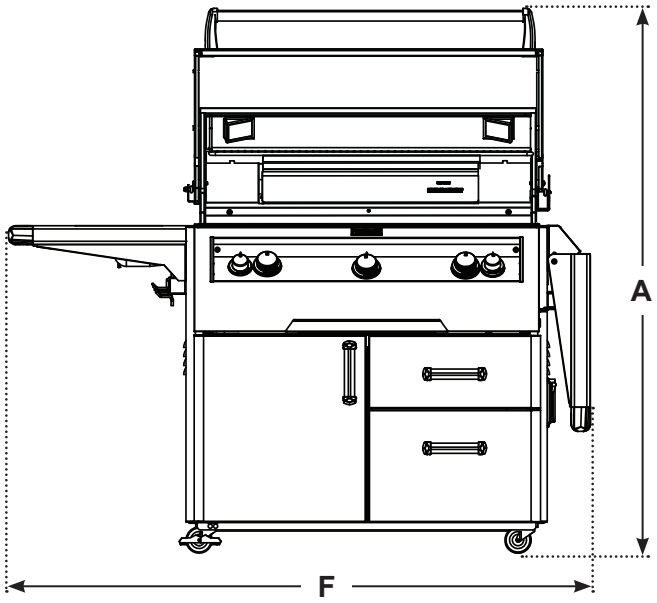

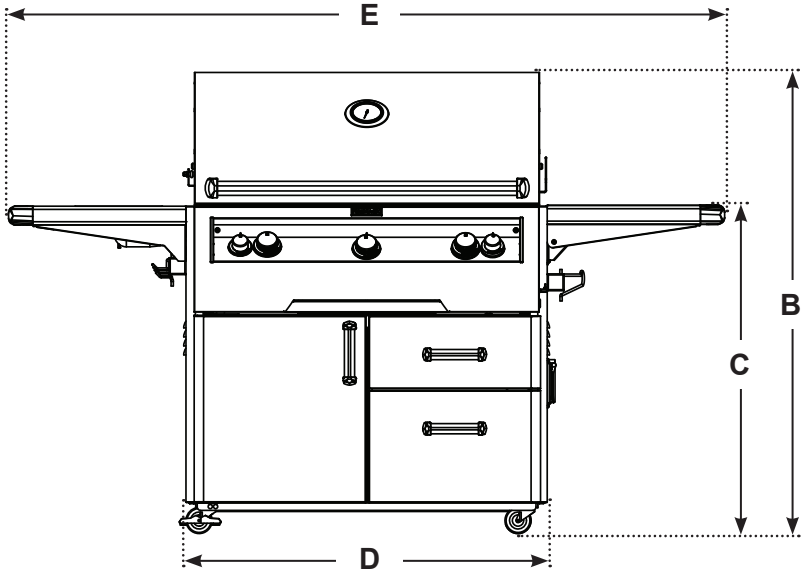

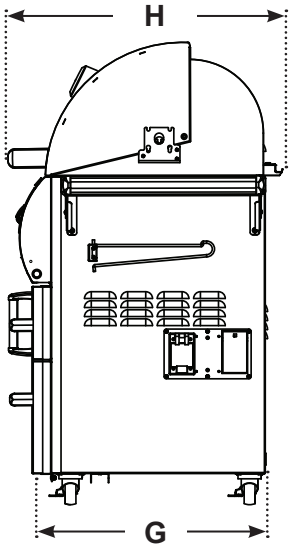

STAND-ALONE GRILL WIRING DIAGRAM*

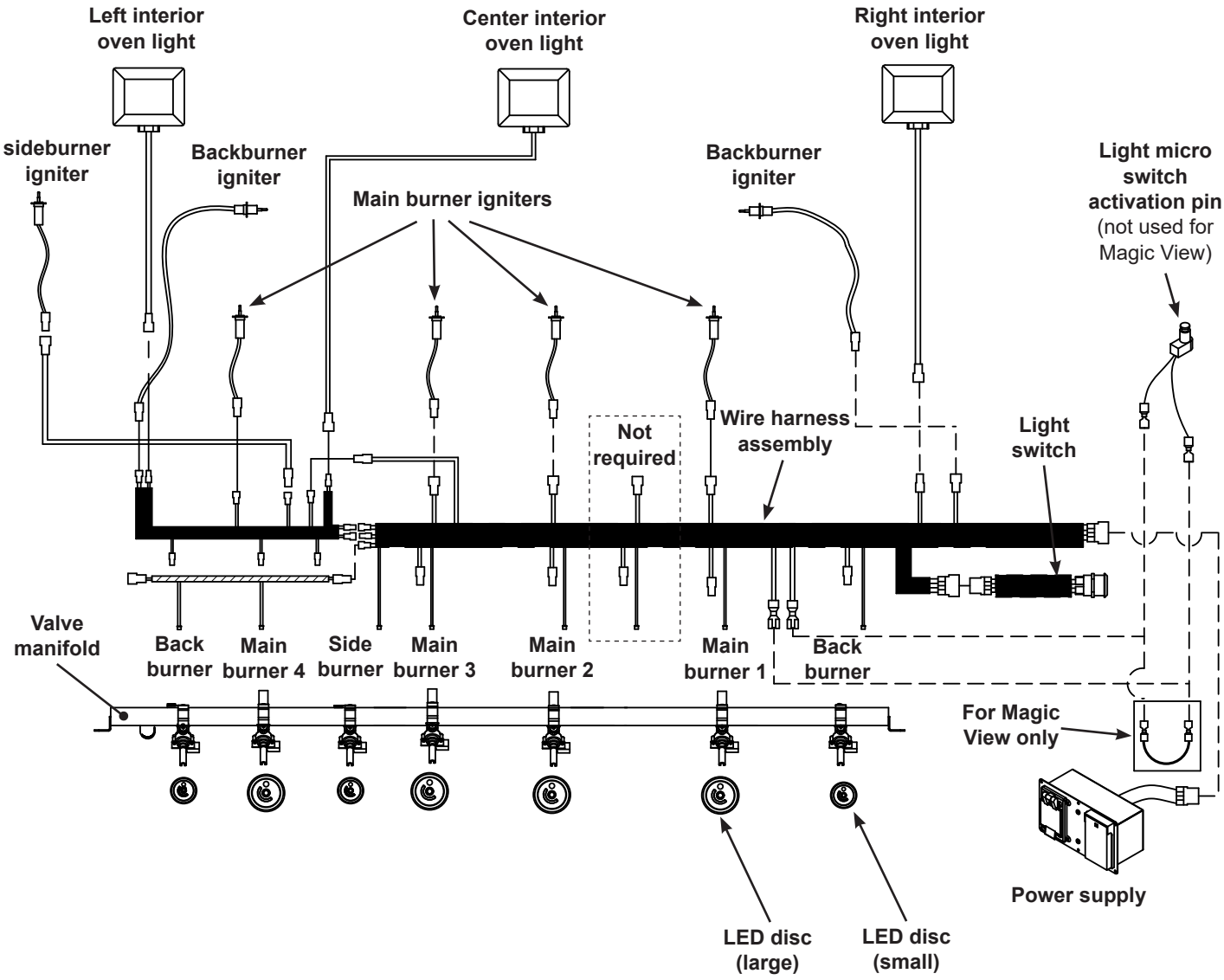

*** E1060s model shown. Model wire diagrams may vary.**

Note: In addition, a wire diagram specific to your unit can be found affixed to the inside of the control panel.

ECHELON GRILL REPLACEMENT COMMON PARTS LIST

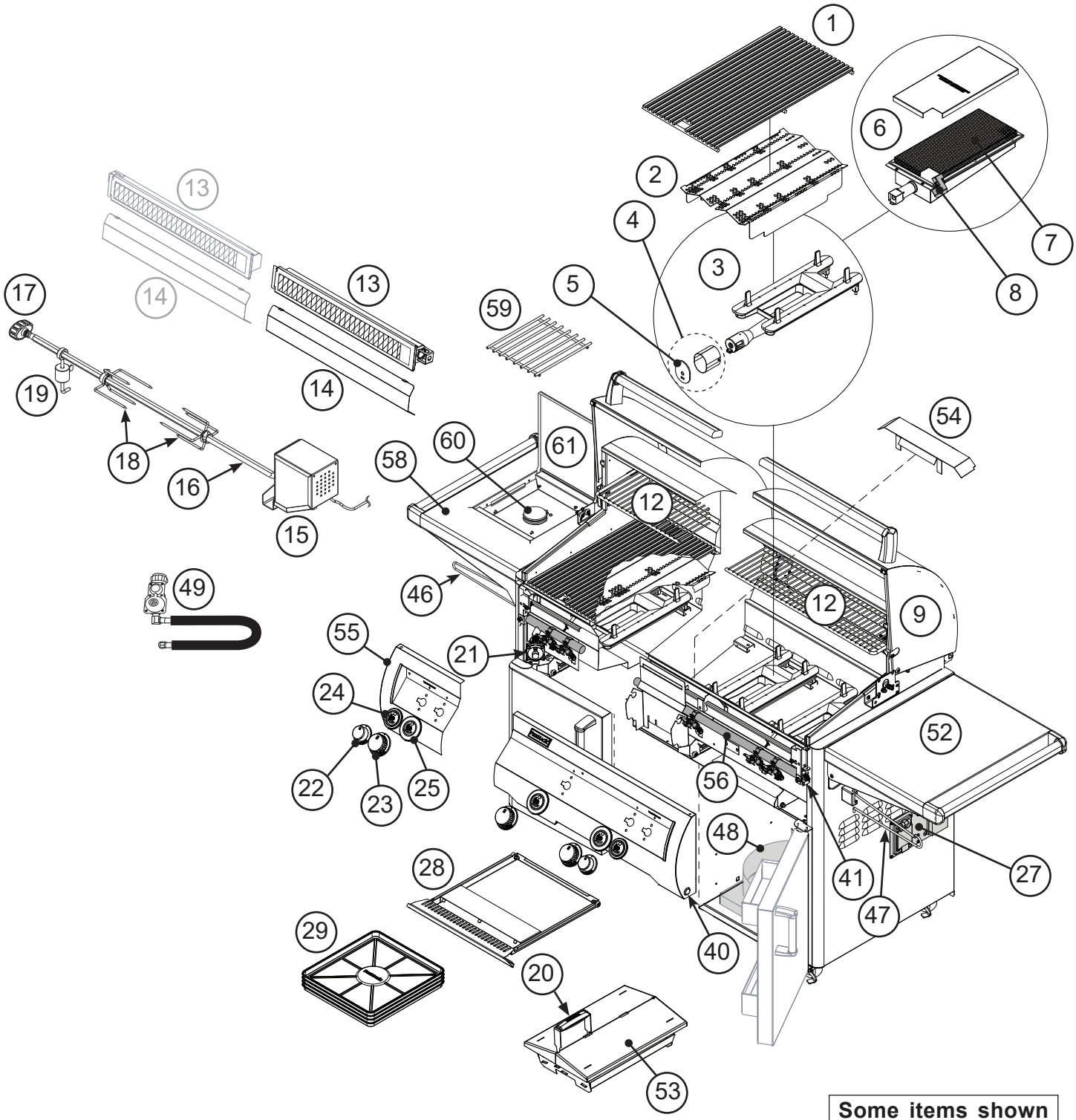

Fig. 19-1

Some items shown are optional, or are not available for certain models. Your model may vary, refer to parts list table.

Items in light gray are not available on all models.

To order replacement parts, contact your local Fire-Magic dealer.

E660s & E790s grills are equipped with two drawers on the right side of the unit.

ECHELON GRILL REPLACEMENT COMMON PARTS LIST (cont.)

		E660s		E790s		E1060s	
Item	Description	Part No.	Qty.	Part No.	Qty.	Part No.	Qty.
1.	Stainless cooking grid (set of 2 or 3)	3544-DS-3	1	3539-DS-3	1	23539-DS-2	2
2.	Flavor grid (set of 3 or 4)	3070-S-3	1	3071-S-3	1	3071-S-4	1
3.	Main burner	3041-50	3	3041-50	3	3041-50	4
4.	Flame arrester kit	24177-05	3	24177-05	3	24177-05	4
5.	Silicone gasket	24177-06	3	24177-06	3	24177-06	4
6.	Infrared burner assembly *	3056A	1	3056A	1	3056A	1
7.	Infrared radiant protective screen *	3050-02A	1	3050-02A	1	3050-02A	1
8.	Infrared electrode assembly *	3199-80	1	3199-80	1	3199-80	1
9.	Oven lid w/ oven thermometer (no handle)	24193-57	1	24188-57	1	24183-57	1
or	Oven lid w/ Magic View Window & oven thermometer (no handle)	24193-59	1	24188-59	1	24183-59	1
10.	Oven lid spring kit ‡	23745-11	1	23745-11	1	23747-04	1
11.	Magic View Window (only)*‡	24187-52	1	24187-53	1	24187-53	1
12.	Warming rack	3673S-B	1	3675S-B	1	3674S-B	1
13.	Backburner assembly	24794-03	1	24789-03	1	24794-03	2
14.	Backburner cover	24794-011	1	24789-011	1	24794-011	2
15.	Super heavy-duty rotisserie motor	3600-05M	1	3600-05M	1	3600-05M	1
16.	Super heavy-duty rod	3606-40	1	3609-40	1	3607-40	1
17.	Rotisserie knob	24187-16	1	24187-16	1	24187-16	1
18.	Meat holder (pair)	3613	1	3613	1	3613	1
19.	Counterbalance	3620E	1	3620E	1	3620E	1
20.	Grid lifter	3519H	1	3519H	1	3519H	1
21.	Convertible regulator	PR-4	1	PR-4	1	PR-4	1
22.	Small knob	24182-42	2	24182-42	2	24182-42	3
23.	Large knob	24182-41	3	24182-41	3	24182-41	4
24.	LED disk (small)	24182-66	2	24182-66	2	24182-66	3
25.	LED disk (large)	24182-65	3	24182-65	3	24182-65	4
26.	Oven lid thermometer w/ bezel ‡	23307	1	23307	1	23307	1
27.	Power supply w/ outlet	24387-18	1	24387-18	1	24387-18	1
28.	Drip tray	3087A	1	3087A	1	3087A	2
or	Drip tray w/ match holder	3087M	1	3087M	1	3087M	2
29.	Drip tray liner (set of 4)	3558	1	3558	1	3558	1
30.	Wire harness w/ raceway ‡	24194-28	1	24189-27	1	24184-27	1
31.	Backburner electrode *‡	4199-52	1	4199-52	1	4199-52	2

* If equipped

‡ Not shown

ECHELON GRILL REPLACEMENT COMMON PARTS LIST (cont.)

Item	Description	E660s Part No.	E660s Qty.	E790s Part No.	E790s Qty.	E1060s Part No.	E1060s Qty.
32.	Main burner electrode‡	3199-72	3	3199-72	3	3199-72	4
33.	Natural gas orifice(s) ‡	3001-42-3	1	3001-38-3	1	3001-40-4	1
34.	Natural backburner gas orifice(s) ‡	3001-53-1	1	3001-51-1	1	3001-53-2	1
35.	Propane gas orifice(s) ‡	3001-54-3	1	3001-53-3	1	3001-53-4	1
36.	Propane backburner gas orifice(s) ‡	3001-63-1	1	3001-57-1	1	3001-63-2	1
37.	**12v / 10 watt** halogen bulb ‡	24187-15	2	24187-15	2	24187-15	3
38.	Light lens ‡	24187-26	2	24187-26	2	24187-26	3
39.	Lamp assembly ‡	24187-28	2	24187-28	2	24187-28	3
40.	Light switch	24182-46	1	24182-46	1	24182-46	1
41.	Light micro switch activation pin	24187-20	1	24187-20	1	24187-20	1
42.	Lighting tube (left) ‡	24187-65L	1	24187-65L	1	24187-65L	2
43.	Lighting tube (left) ‡	24187-65C	1	24187-65C	1	N/A	
44.	Lighting tube (right) ‡	24187-65R	1	24187-65R	1	24187-65R	2
45.	Backburner flex connector ‡	3030-08	1	3030-08	1	3030-08	2
46.	Tool holder	25387-12	1	25387-12	1	25387-12	1
47.	Paper towel holder	25387-11	1	25387-11	1	25387-11	1
48.	Propane tank tray (propane models only)	24336-36	1	24336-36	1	24336-36	1
49.	Propane regulator with hose (propane models only)	5110-15	1	5110-15	1	5110-15	1
50.	Quick disconnect hose ‡ (included with natural models only)	5110-03	1	5110-03	1	5110-03	1
51.	Power cord ‡	25387-13	1	25387-13	1	25387-13	1
52.	Folding shelf	24336-18	1	24336-18	1	24336-18	1
53.	Charcoal / smoker basket	3564-2	1	3564-2	1	3564-2	1
54.	Air Baffle	24194-41	1	24194-41	1	24183-41	2

* If equipped

‡ Not shown

SINGLE SIDEBURNER UNIQUE PARTS LIST (62 SERIES)

Item	Description	E660s Part No.	E660s Qty.	E790s Part No.	E790s Qty.	E1060s Part No.	E1060s Qty.
55.	Control panel w/ backburner, raceway, and wire harness	24394-19	1	24389-19	1	24384-19	1
56.	Valve manifold w/ backburner	24393-23	1	24388-23	1	24383-23	1
57.	Sideburner (burner only) ‡	3279-35	1	3279-35	1	3279-35	1
58.	Sideburner assembly w/ shelf	24336-19	1	24336-19	1	24336-19	1
59.	Sideburner grid	3552	1	3552	1	3552	1
60.	Sideburner cap	3279-36	1	3279-36	1	3279-36	1
61.	Sideburner lid	24336-31	1	24336-31	1	24336-31	1
62.	Sideburner wire harness extension ‡	24374-19	1	24374-19	1	24374-19	1

‡ Not shown

DOUBLE SIDEBURNER UNIQUE PARTS LIST (71 SERIES)

Item	Description	E660s Part No.	E660s Qty.	E790s Part No.	E790s Qty.
21.	Convertible regulator	PR-4	2	PR-4	2
22.	Small knob	24182-42	3	24182-42	3
23.	Large knob	24182-41	3	24182-41	3
24.	LED disk (small)	24182-66	3	24182-66	3
25.	LED disk (large)	24182-65	3	24182-65	3
52.	Folding shelf	24336-18	2	24336-18	2
55.	Main control panel w/ raceway and wire harness	24394-20	1	24389-20	1
56.	Main valve manifold	24193-23	1	24188-23	1
57.	Double sideburner valve manifold	3281-22	1	3281-22	1
58.	Double sideburner (only) ‡	3279-32	2	3279-32	2
59.	Double sideburner grid	3529-S	1	3529-S	1
60.	Sideburner cap	3279-36	2	3279-36	2
61.	Double sideburner cover	3281-07	1	3281-07	1
62.	Double sideburner wire harness extension ‡	34394-19	1	34394-19	1

* If equipped
‡ Not shown

Note: See pages 19-21 for common part and number identification.

Grills equipped with a double sideburner are available for 660s and 790s series.
790s shown here.

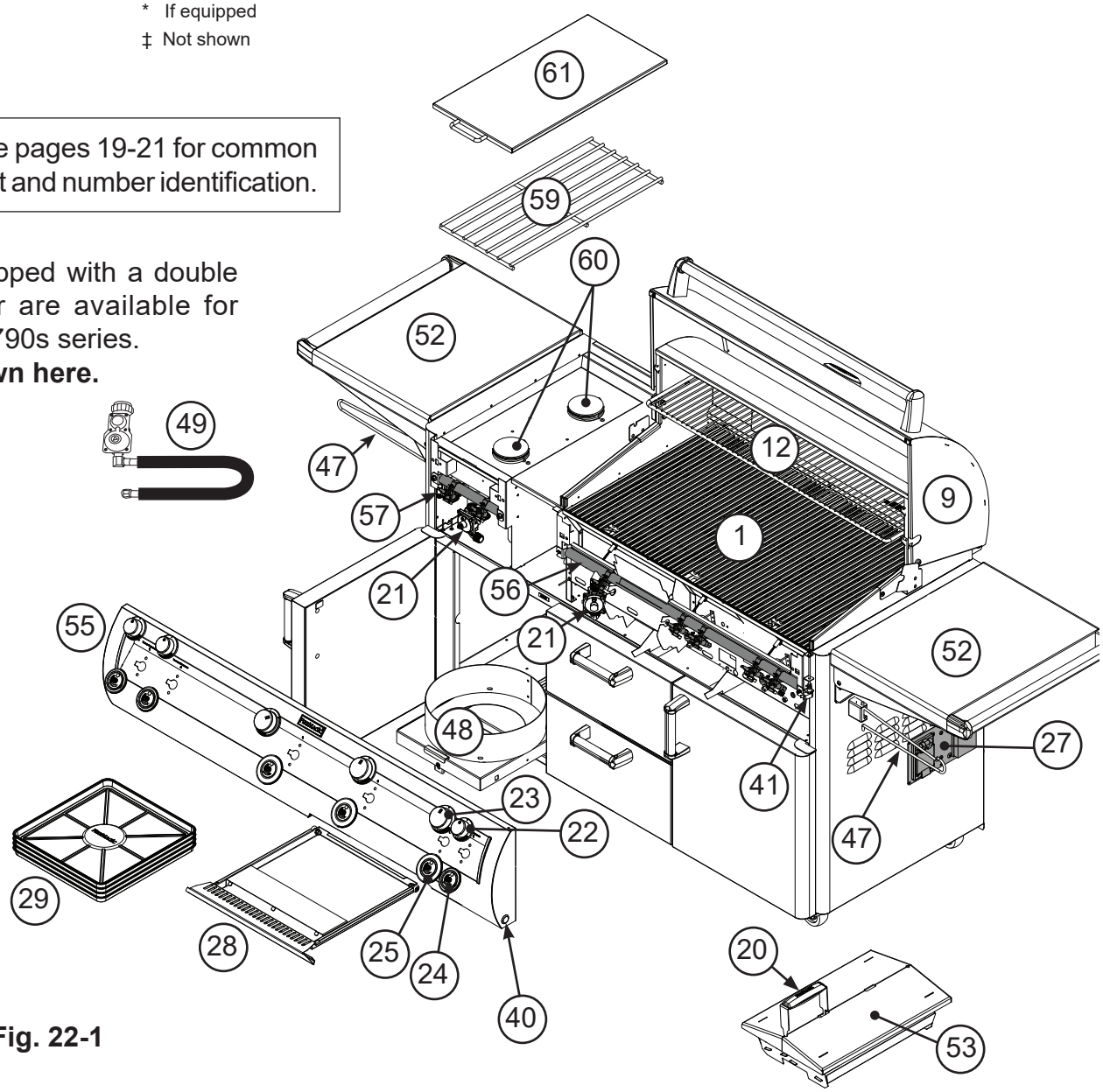

Fig. 22-1

POWER BURNER UNIQUE PARTS LIST (51 SERIES)

Item	Description	E1060s Part No.	Qty.
21.	Convertible regulator	PR-4	2
22.	Small knob	24182-42	3
23.	Large knob	24182-41	5
24.	LED disk (small)	24182-66	3
25.	LED disk (large)	24182-65	5
28.	Drip tray (grill side)	3087A	2
48.	Propane tank tray (propane models only)	24336-36	2
49.	Propane regulator with hose (propane models only)	5110-15	2
52.	Folding shelf	24336-18	2
55.	Main control panel w/ raceway and wire harness	24384-19	1

Item	Description	E1060s Part No.	Qty.
56.	Main valve manifold	24383-29	1
57.	Power burner valve manifold	3278-14	1
58.	Power burner (only)	3278-01B	1
59.	Power burner grid - stainless steel	3545-S	1
or	Power burner grid - porcelain cast	3545	1
60.	Power burner collimator	3279-09	1
61.	Power burner cover	3278-06	1
62.	Power burner control panel	23278-10	1
63.	Power burner wire harness extension ‡	34384-19	1
64.	Interior protection plate	3278-30	1
65.	Drip tray (power burner side)	3089M	1

* If equipped

‡ Not shown

Note: See page 19-21 for common part and number identification.

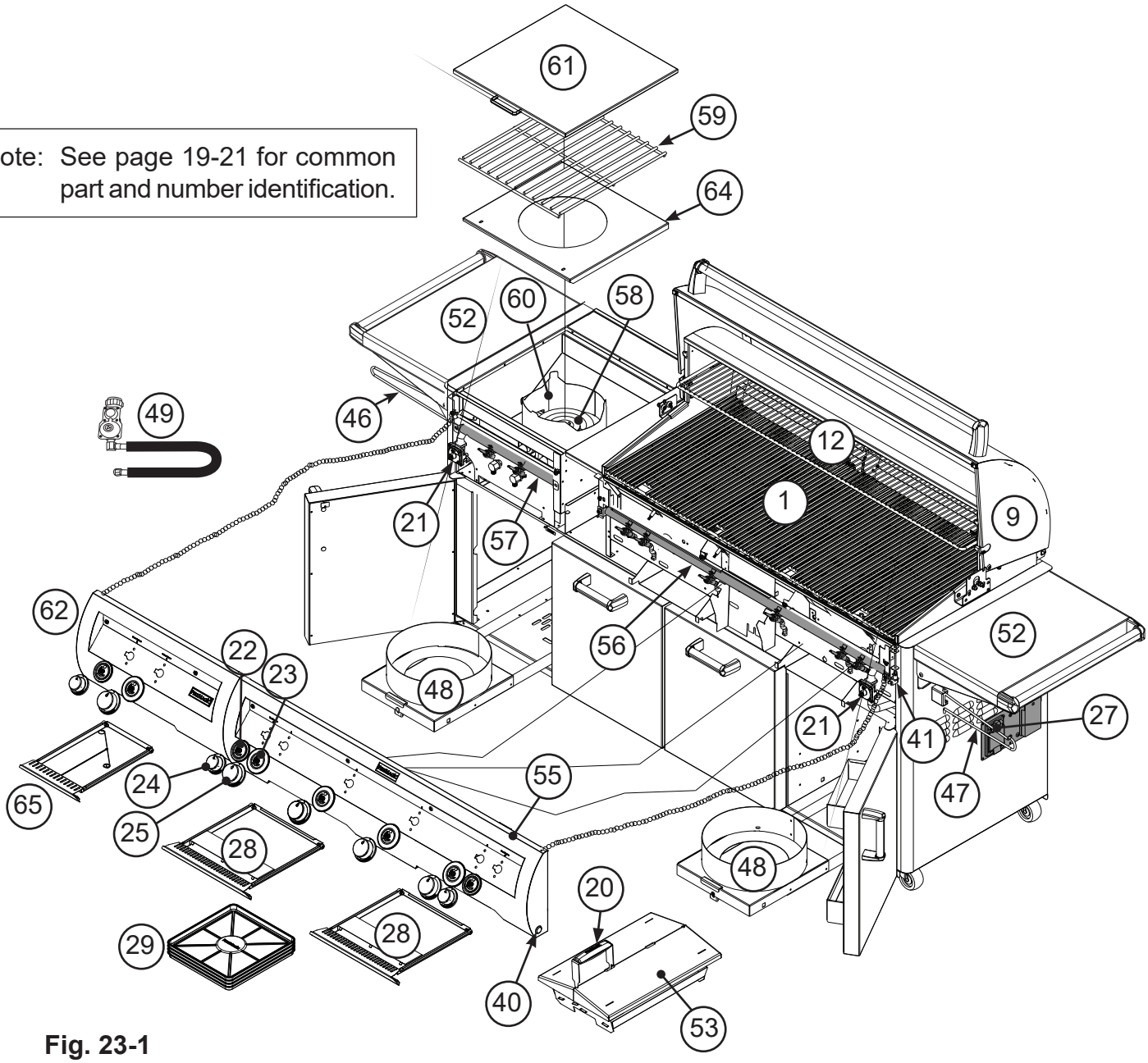

Fig. 23-1

LOCATION PREPARATION

Prepare a flat, level surface capable of supporting the weight of the stand-alone grill and convenient to the gas supply if connecting to a gas line.

WHEELS AND CASTERS

To lock a caster press down on the side of the lever with the word "ON" stamped on it until it stops and the caster will not turn. To unlock, press down on the side stamped "OFF."

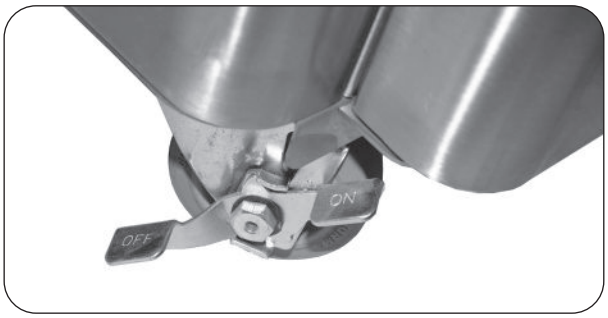

Fig. 24-1 Lock/unlock wheels

INSTALL TOOL HOLDER AND PAPERTOWEL HOLDER

The rectangular mounting bracket for the tool holder and the paper towel holder come pre-attached to the sides of the cart.

Unpack the holder portion, squeeze the open ends together slightly, and install them into the mounting bracket (see Fig. 24-2). Next, release the hanger so that the ends extend out through the holes in the top and bottom of the mounting bracket (Fig. 24-3, 24-4).

When not in use, the racks may be folded back against the wall of the grill (Fig. 24-3, 24-4).

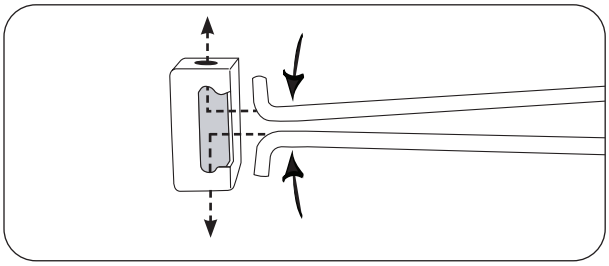

Fig. 24-2 Install tool holder / papertowel holder

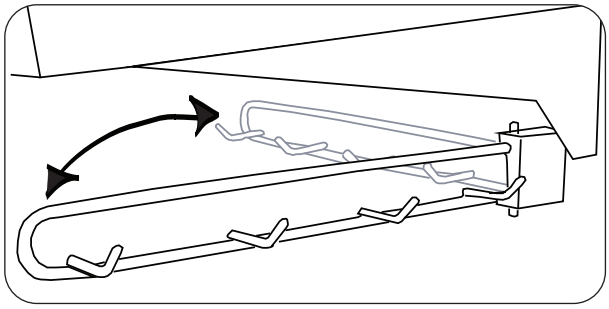

Fig. 24-3 Tool holder detail

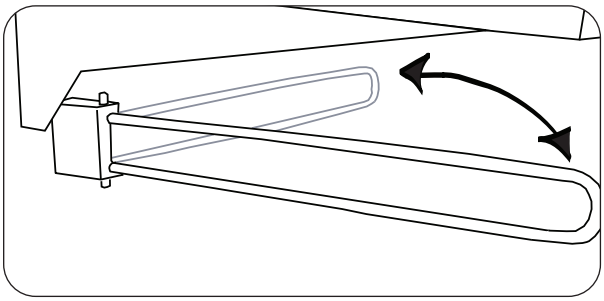

Fig. 24-4 Papertowel holder detail

CONNECT GAS SUPPLY

To Connect To Propane Cylinder:

Read the safety warnings and follow the instructions in the section SAFE USE AND MAINTENANCE OF PROPANE GAS CYLINDERS.

To Connect To Natural Or Household Propane Gas Supply:

- Before connecting the gas supply to your appliance, pressures MUST be tested and MUST NOT exceed 10.5” w.c. for Nat. gas and 13” w.c. for L.P. gas. An additional regulator may be required.
- Refer to the GAS SUPPLY PLUMBING REQUIREMENTS section for all details on the gas supply and its setup.
- For natural gas models, a quick disconnect hose is included and pre-installed to the unit valve manifold. For household propane, an appropriate, C.S.A. approved, flexible hose or similar MUST be purchased to route from the unit valve manifold out to the gas line. The R.H.P. quick disconnect hose is recommended, and is discussed and illustrated here. See PARTS LIST and contact your dealer for ordering information. (If your setup varies from what is shown here, **observe the National Fuel Gas Code and all local codes.**)

1. **Turn OFF gas supply at the source.**
2. **Household propane only:** A regulator hose assembly designed for L.P. cylinders comes pre-installed to the unit valve manifold. First remove this assembly from the flare adapter (at end of manifold), and then install a quick disconnect hose or similar (purchased separately) to the adapter. (An R.H.P. quick disconnect hose is recommended - see third bullet above.) Use a pipe joint compound resistant to all gasses on all NPT pipe fittings **except flare fittings**. Reference Fig. 25-1. Then proceed to step 3.
3. Route the quick disconnect hose (or similar) out of the hole in the rear bottom right of the cabinet, and to the gas supply (see Fig. 25-1).

Note: For quick disconnect hoses, the quick disconnect female socket will first need to be detached to allow the hose to feed through the hole.

4. A shut-off valve is required within 6 feet of the unit and must be easily accessible.

   Connect the quick disconnect female socket to the shut-off valve OR gas supply (NPT) using a pipe joint compound resistant to all gasses (see Fig. 25-2). Tighten securely. Re-attach the hose to the disconnect female socket.

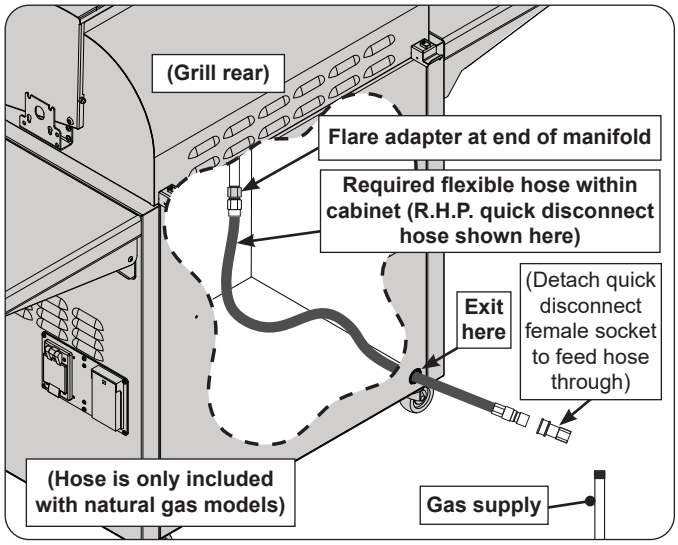

Fig. 25-1 Flexible hose assembly detail

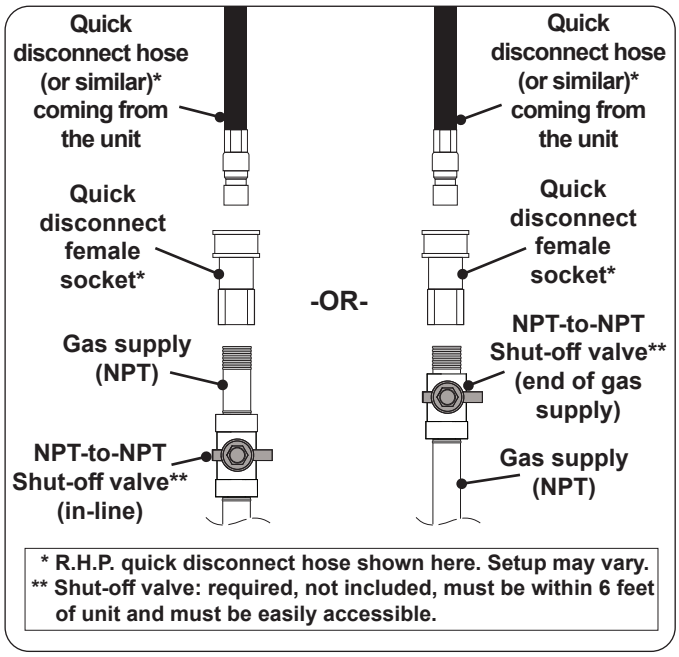

Fig. 25-2 Connecting to a gas line

LEAK TEST

Turn all burner valves to the **OFF** position. Turn on the gas supply, and test at all connections for leaks using a soapy water solution. If bubbles appear, a leak is present. Turn off the gas and tighten at all connections. Repeat until no leaks are present. If a leak persists, turn off the gas supply and contact the local gas company or dealer. **NEVER USE A FLAME TO CHECK FOR LEAKS.**

Once the leak test is complete, turn off the gas supply and proceed.

INSTALL FLAVOR GRIDS

Note: Flavor grids are not to be used over infrared burners.

Place the flavor grids onto the front and rear flavor grid rests. Align the cutouts on the grids to the lighting tubes. See Fig. 26-1. **The short grids are designed to rest over the outer burners and the tall grid(s) over the inside burner(s).** The flavor grids allow heat from the burners to be evenly distributed throughout the cooking area.

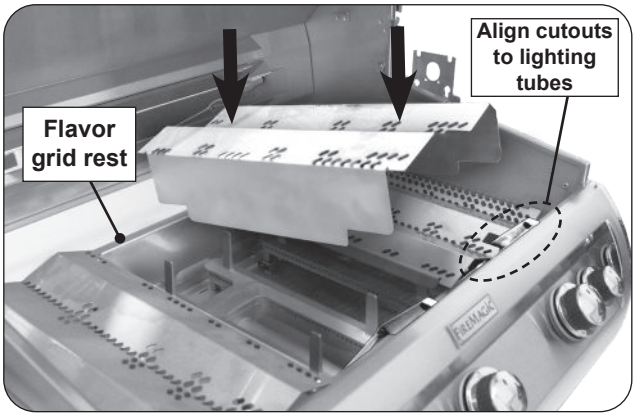

Fig. 26-1 Install flavor grids

INSTALL COOKING GRIDS

Note: Wear heat-resistant gloves if necessary.

Note: Do not leave the lifter on any hot surfaces.

1. With the prongs facing downward, insert the notched-end of the lifter between two grid rods, then rotate, as shown in Fig. 27-1, A & B.

Note: To balance, insert the notched-end of the lifter in the middle front half of the cooking grid.

2. Insert the rear pointed-end of the lifter between the same two rods (Fig. 27-1, B) and carefully lift the cooking grid and place onto the front and rear grid rests of the grill (see Fig. 27-2). Repeat for all other cooking grids.

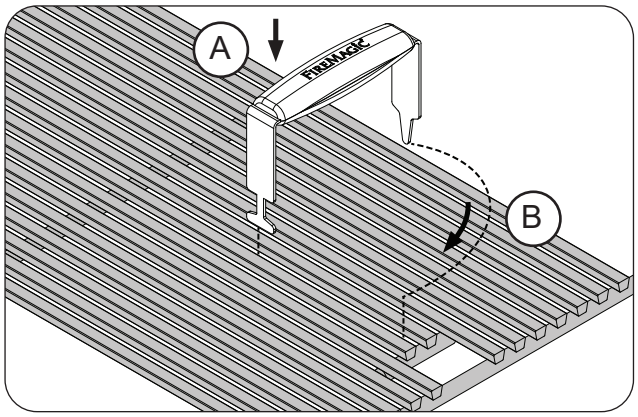

Fig. 27-1 Install cooking grids

Fig. 27-2 Install cooking grids

INSTALL DRIP TRAY

Your grill includes a pack of four drip tray liners.

1. Lift the heatshield slightly, then place a liner into the drip tray (Fig. 27-3, A and B).
2. Then fully insert the drip tray assembly into the bottom front opening of the control panel (Fig. 27-3, C).

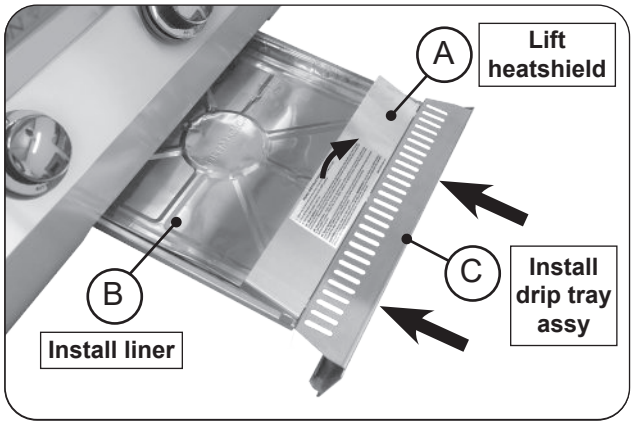

Fig. 27-3 Install drip tray

INSTALL WARMING RACK

Note: Wear heat-resistant gloves if necessary.

1. Locate the warming rack hooks and rear supports found on the upper portion of the grill oven (see Fig. 28-1).
2. With the warming rack oriented as shown, carefully rest the rear of the rack onto the rear support plates (see Fig. 28-2, A), then lower the warming rack arms onto the lower hooks for use (see Fig. 28-2, B).

   Use the top hooks for storage (see Fig. 28-1 and Fig. 28-3).

Note: Placing the warming rack into storage position or removing before using the rotisserie will leave more clearance for the meat being cooked (if needed).

INSTALL SIDEBURNER SHELF (if equipped)

This shelf comes separate from the grill for convenience in shipping. The sideburner shelf must be installed using the following instructions before fully testing the unit.

1. Remove the protective plastic from the grill, sideburner, and sideburner lids by carefully peeling it off with your fingers. Do not use tools.
2. Hold the sideburner shelf up against the left side wall of the grill so that the holes in the shelf line up with the four (4) threaded screw holes in the side wall and the air-shutter end of the sideburner venturi tube fits around the brass orifice protruding from the side of the cart. See Fig. 28-4.

WARNING: It is critical for safety and for the proper function of the sideburner that the sideburner venturi tube with air shutter be centered around and completely cover the gas orifice.

3. Insert and start screws with fingers and then tighten using a Phillips screwdriver. See Fig. 28-4.

Important: Take caution to **not cross-thread** when tightening the screws.

Note: Upon completion, the air shutter must still fit around the brass orifice.

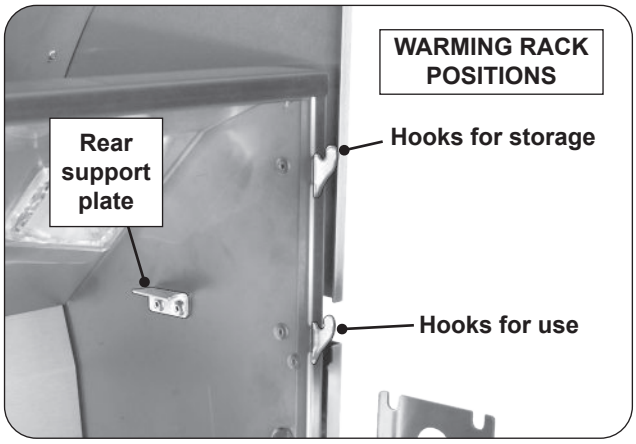

Fig. 28-1 Warming rack hooks

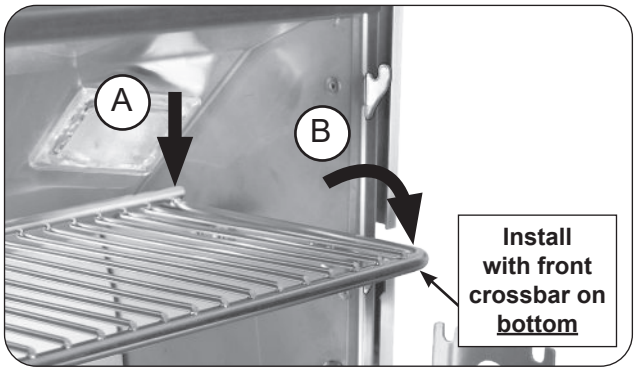

Fig. 28-2 Place warming rack for use

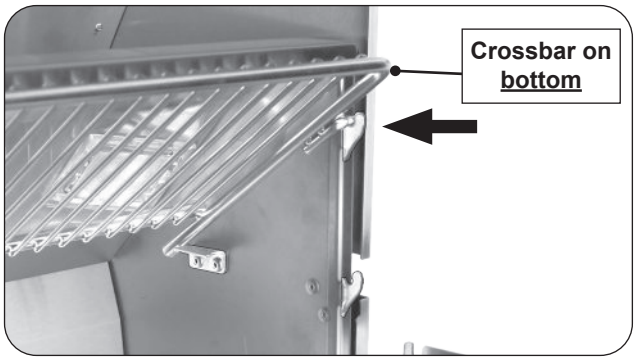

Fig. 28-3 Place warming rack in storage position

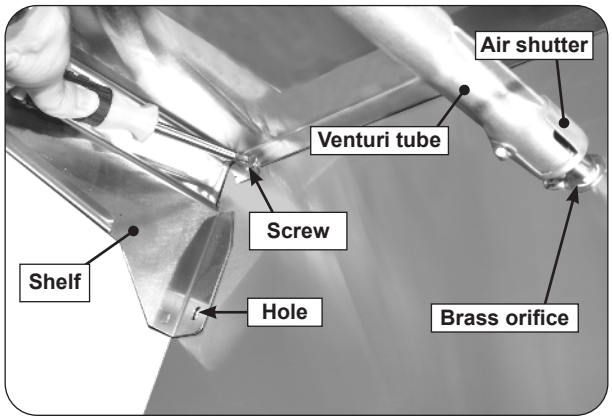

Fig. 28-4 Burner shelf setup (under shelf view)

4. Connect the female connector on the end of the hot surface igniter wire to the male connector coming from inside the grill. See Fig. 29-1.
5. Place the burner cap on top of the burner, as shown in Fig. 29-2.
6. Place the grid so that it rests on the front and back lips of the sideburner opening (Fig. 29-2).
7. Complete the side burner installation by connecting the power supply to line power (see section below) as well as adjusting the side burner air shutter. See the AIR SHUTTER ADJUSTMENT / BURNER FLAME INSPECTION section for complete details. This will also test the sideburner installation.

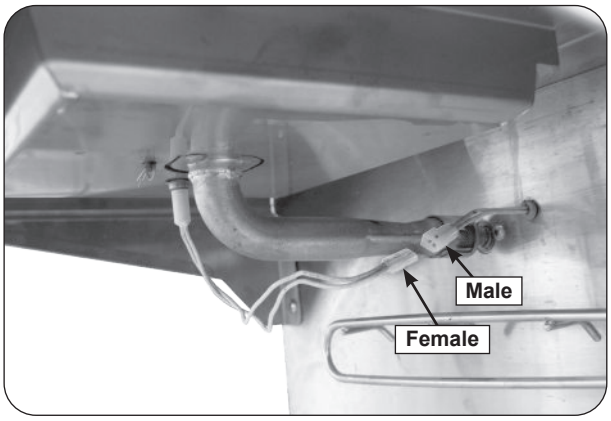

Fig. 29-1 Igniter wire connection

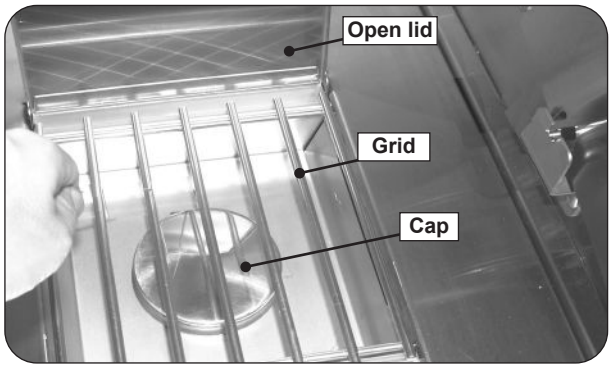

Fig. 29-2 Place burner cap and grid

CONNECT POWER SUPPLY TO LINE POWER

Connect the supplied female receptacle end of the cord to the male inlet plug located on the right side of the grill. Then connect the male plug end of the cord to a **120VAC (15 AMP minimum) GFCI <u>GROUNDED</u> three-wire receptacle.** The GFCI receptacle must be a WEATHER-PROOF IN-USE COVERED RECEPTACLE.

WARNING: Electrical Grounding Instructions - This appliance is equipped with a three-pronged (grounding) plug for your protection against shock hazard and should be plugged directly into a properly grounded three-prong receptacle. <u>Do not cut or remove the grounding prong from this plug.</u>

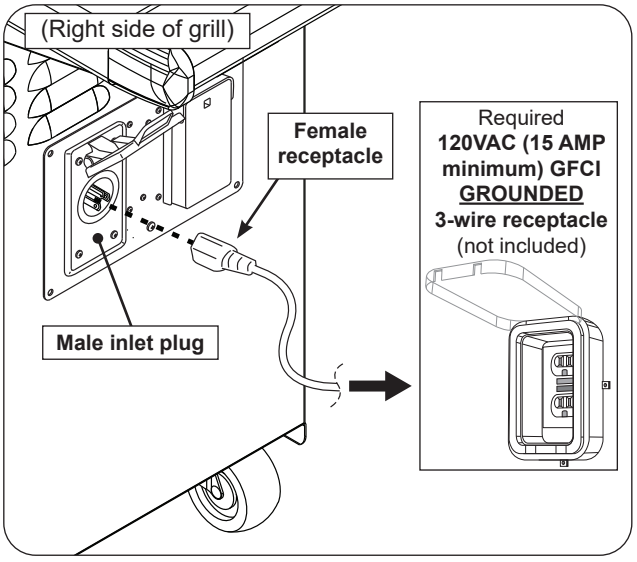

Fig. 29-3 Connect to line power

OPERATION TEST

After installation, perform an operation test of the grill and its features/accessories. Refer to the following sections for details.

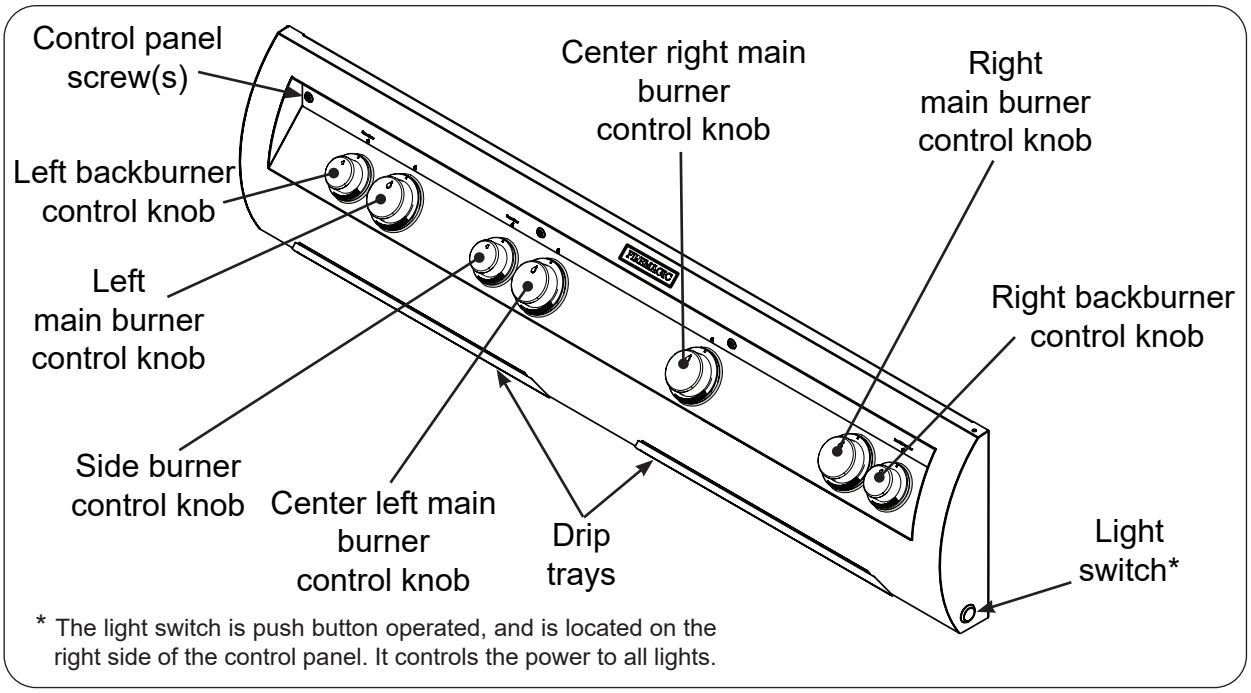

Fig. 30-1 E1060s controls

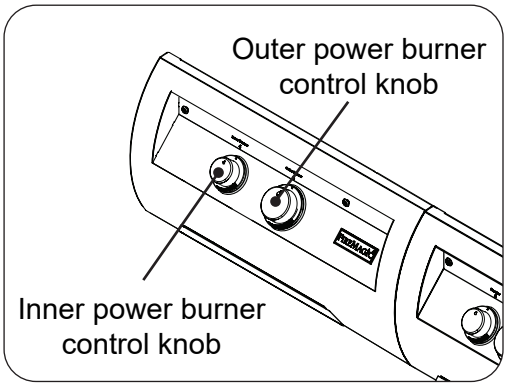

Fig. 30-2 Power burner controls

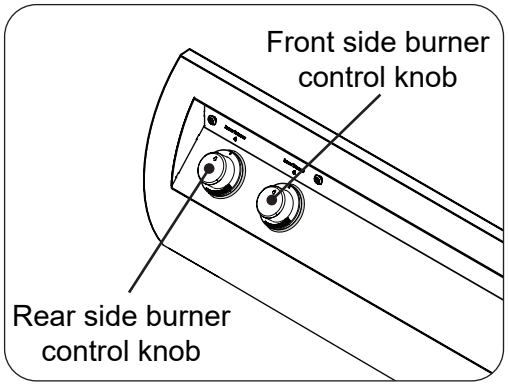

Fig. 30-3 Double side burner controls

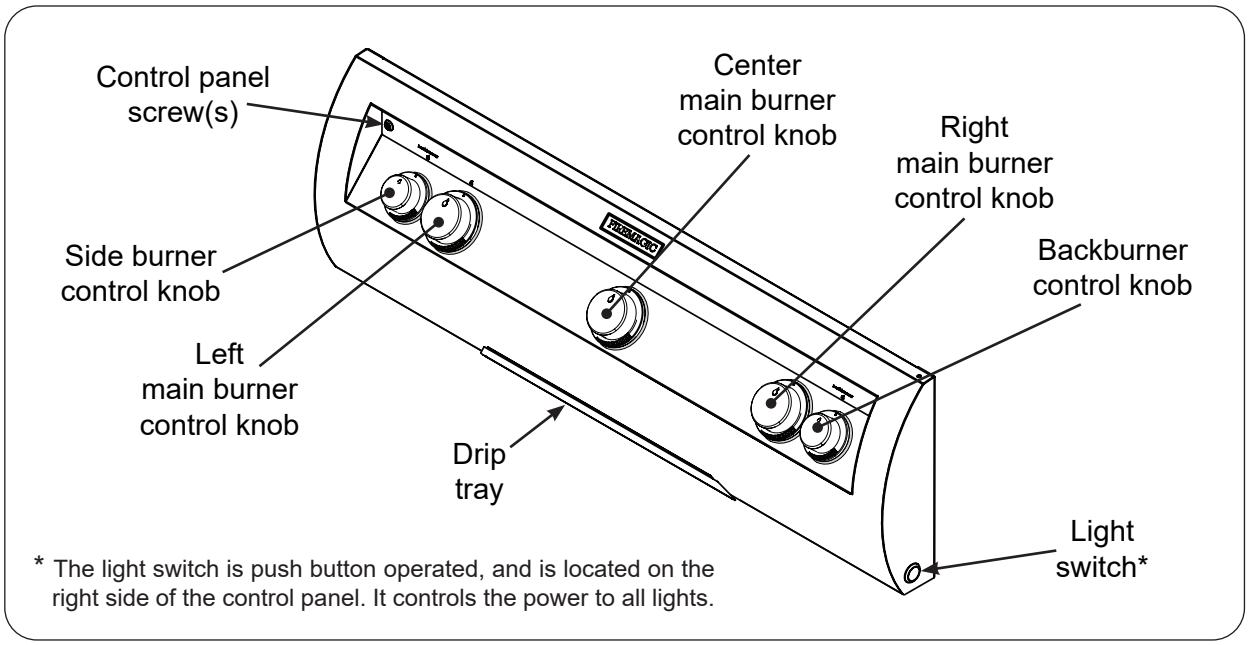

Fig. 30-4 E660s and E790s controls

USING THE GRILL

BEFORE INITIAL USE

Ensure that:

- the unit has been properly installed and leak tested by a qualified professional service technician and as instructed in this manual.
- you have read and understand all of the information in this manual.

BEFORE EACH USE

Ensure that:

- you smell around the appliance area for gas. If you smell gas (and all control knobs are in the **OFF** position), immediately shut off the gas supply and contact a qualified professional service technician or the gas supplier for inspection.
- the vent openings and surrounding area of the unit are clear and free at all times.
- the cooking area and drip tray are clean, and the drip tray is properly installed.
- you inspect all piping and hoses for damage, cuts, wear, and tear. Replace any damaged components prior to use.

OPERATION

- **The unit becomes HOT during use. NEVER touch any part of the cooking area or surrounding hot surfaces with bare hands. Use long-handled insulated BBQ tools and wear an insulated glove / oven mitt.**
- **Always keep your face and body as far from the unit as possible during use. Avoid wearing loose-fitting clothing as they could ignite.**
- **This appliance is designed as an attended appliance. DO NOT leave this appliance burning when unattended.**
- **NEVER cover more than 75% of the cooking surface with griddles, pots or pans to prevent overheating.**
- **After each use, turn the control knob(s) to the OFF position and turn off the gas supply to the unit.**

After reading and understanding all bullets above, follow these steps to light and use your grill:

1. Light the grill per the LIGHTING INSTRUCTIONS section.
2. Turn the control knobs to the HI-LIGHT position, close the hood, and allow the grill to preheat for 15 minutes or until desired cooking temperature is reached.
3. Place the food on the grill and cook as desired. Monitor the flames and the temperature, and adjust the heat setting if necessary.
4. See the sections below and the following pages for all other information regarding use.

WIND CONSIDERATIONS

Proper airflow (front-to-back, Fig. 31-1) MUST be maintained for the unit to perform as it was designed. See the INSTALLATION REQUIREMENTS section for details.

When using the unit in windy conditions, the wind can disrupt the airflow and cause overheating. To prevent overheating during windy conditions, do not leave the hood closed with the burners on high for more than 15 minutes.

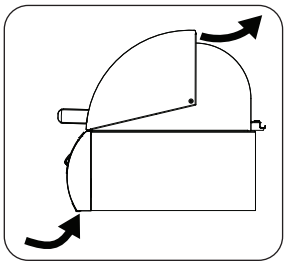

Fig. 31-1
Airflow diagram

WARMING RACK

The warming rack can be placed in two positions: the lower hooks are for use and the upper hooks are for storage. Refer to the INSTALLATION section for information on warming rack positioning.

AFTER EACH USE

1. Operate on high with hood closed for 10-15 minutes to burn off all grease.
2. Turn off the grill and brush the cooking grids to remove all residue.

CAUTION: Use long-handled insulated BBQ tools and wear an insulated glove / oven mitt.

3. When the grill is cool, check and clean the drip tray. Then cover the grill.

Note: For additional cleaning information, refer to the SERVICING AND CLEANING section.

ALLUMAGE DES INSTRUCTIONS (D'ALLUMAGE)

Lisez toutes les instructions avant l'allumage, et suivez ces instructions chaque fois vous lumière le unité.

ÉCLAIRAGE ÉLECTRONIQUE

Note: Le unité doit être relié à la puissance 120VAC pour l'éclairage électronique.

1. Ouvrez les couvercles ou enlevez les couvertures des brûleurs pour être Lit.
2. Tournez tous les boutons de commande de gaz à leurs positions de repos.
3. Allumez le gaz à sa source.

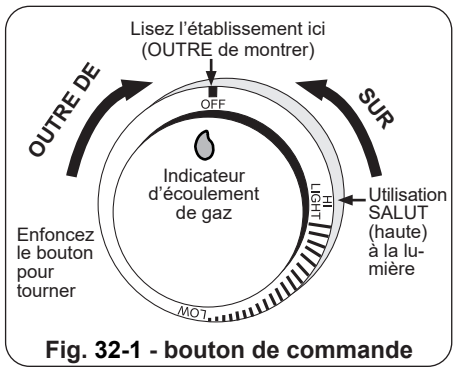

Fig. 32-1 - bouton de commande

Note: N'ouvrez pas plus d'une valve à la fois pour l'éclairage électronique ou manuel.

4. Appuyez sur le bouton de commande souhaité **pendant 5 secondes**. Assurez-vous que l'allumeur brille (à l'intérieur du tube d'éclairage), puis tout en appuyant, tournez le bouton dans le sens inverse des aiguilles d'une montre jusqu'à la position **HI LIGHT**. Une fois le brûleur allumé, relâchez le bouton.

ATTENTION : Si un brûleur ne s'allume pas dans cinq (5) secondes d'allumer le bouton de commande, enfoncez le bouton et tournez-le à la position de repos. ATTENDEZ CINQ (5) MINUTES avant de répéter l'étape 4. Si vous sentez le gaz, suivez les instructions sur la couverture de ce manuel. Si les brûleurs ne s'allument toujours pas après que plusieurs tentatives, se rapportent aux instructions pour l'éclairage manuel.

5. Répétez l'étape 4 pour que chaque brûleur additionnel soit Lit.

EN EMPLOYANT UN RÉSERVOIR DE PROPANE PORTATIF

Des réservoirs de propane sont équipés d'un dispositif d'arrêt de sûreté qui peut ne pas causer le bas ou aucunes pression de gaz/flamme aux brûleurs si le fonctionnement et l'allumage des instructions ne sont pas suivis exactement (voir la note importante dans la section de dépannage pour plus de détails.)

ÉCLAIRAGE MANUEL

ATTENTION: Attendez toujours cinq (5) minutes le gaz pour se dégager après que n'importe quelle tentative non réussie d'éclairage.

1. Suivez les étapes 1 à 3 (à gauche).
2. Passez un allumeur brûlant de butane de long-baril ou une allumette brûlante de long-tige dans la grille à cuire s'ouvrant au dessus du tube d'éclairage. (Fig. 32-2). Pour les brûleurs de dos ou les brûleurs infrarouges, maintenez la flamme contre la surface du brûleur de brûleurs arrière / infrarouge. Pour les favoris, maintenez la flamme contre le brûleur.

   Les grils équipés d'un brûleur infrarouge comprennent un porte-allumette à rallonge métallique (fixé au plateau d'égouttage) pour faciliter l'éclairage manuel (Fig. 32-3).
3. Tenez la flamme allumette / briquet au sommet du tube d'éclairage **pendant 5 secondes** ou contre le brûleur arrière / infrarouge / le brûleur latéral. Puis appuyer sur le bouton de contrôle approprié et en appuyant tourner dans le sens antihoraire à la position HI LIGHT. Retirez le briquet ou des allumettes quand le brûleur s'allume, puis relâchez le bouton de commande.
4. Si le brûleur ne se allume pas dans les cinq (5) secondes de tourner le bouton de commande, enfoncez immédiatement le bouton et tournez la valve à AU LOIN. ATTENDEZ CINQ (5) MINUTES avant de répéter les étapes 2 à 4 des instructions manuelles d'éclairage.

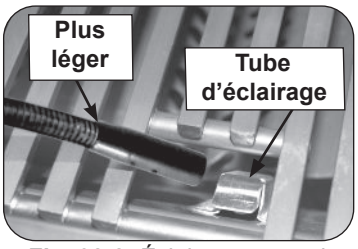

Fig. 32-2 Éclairage manuel via un tube d'éclairage

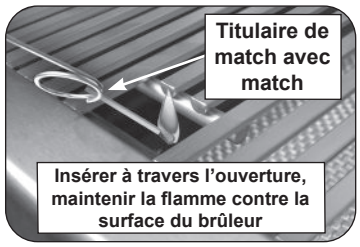

Fig. 32-3 Eclairage manuel via porte allumette

ARRÊT DU UNITÉ

Pour couper le unité, diminuez chaque bouton de commande de valve et tout en pressant tour il dans le sens des aiguilles d'une montre à la position de repos.

Fermez toujours la valve de la fourniture de gaz après chaque utilisation du unité.

Pour votre convenance et sûreté ; quand le bouton de commande est tourné a la position de fonctionnement, l'indicateur d'écoulement de gaz changera de bleu en le rouge. (Le rouge indique l'écoulement de gaz.) Voir la Fig. 32-1.

LIGHTING (IGNITION) INSTRUCTIONS

Read all instructions before lighting, and follow these instructions each time you light the unit.

ELECTRONIC LIGHTING

Note: This unit must be connected to 120 VAC power for electronic lighting.

1. Open lid(s) or remove cover(s) from burner(s) to be lit.
2. Turn all gas control knob(s) to their **OFF** position(s).
3. Turn on the gas at its source.

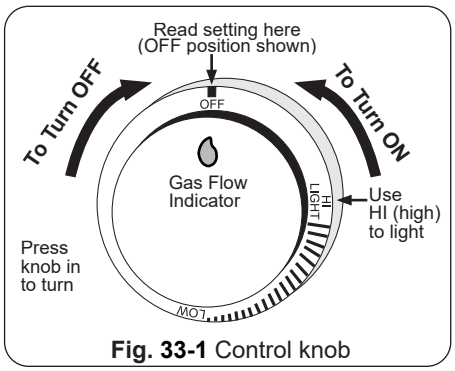

Fig. 33-1 Control knob

Note: DO NOT turn on more than one valve at a time for either electronic or manual lighting.

4. Depress the desired control knob **for 5 seconds**. Ensure the igniter is glowing (inside of lighting tube), then, while pressing turn the knob counterclockwise to the **HI LIGHT** position. Once the burner lights, release the knob.

CAUTION: If a burner does not light within five (5) seconds of turning on the control knob, depress the knob and turn it to the **OFF** position. WAIT FIVE (5) MINUTES before repeating step 4. If you smell gas, follow the instructions on the cover of this manual. If the burners still do not light after several attempts, refer to the instructions for manual lighting.

5. Repeat step 4 for each additional burner to be lit.

MANUAL LIGHTING

CAUTION: Always wait five (5) minutes for gas to clear after any unsuccessful lighting attempt.

1. Follow steps 1 through 3 (left).
2. Insert either a burning long-barrel butane lighter or a burning long-stem match through the cooking grid opening to the top of the lighting tube (see Fig. 33-2). For backburners or infrared burners, hold the flame against the surface of the backburner/infrared burner. For side burners, hold the flame against the burner.

   Grills equipped with an infrared burner include a wire extension match holder (attached to drip tray) to assist with manual lighting (see Fig. 33-3).
3. Hold the match / lighter flame at the top of the lighting tube **for 5 seconds**, or, against the backburner/infrared/sideburner. Then depress the appropriate control knob and while pressing turn it counterclockwise to the **HI LIGHT** position. Remove the lighter or match when the burner lights, and release the control knob.
4. If the burner does not light within five (5) seconds of turning the control knob, **immediately depress the knob and turn the valve to OFF**. WAIT FIVE (5) MINUTES before repeating steps 2 through 4 of the MANUAL LIGHTING instructions.

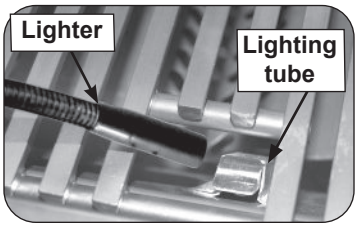

Fig. 33-2 Manual lighting via lighting tube

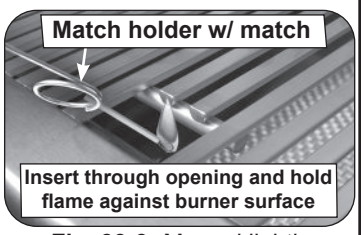

Fig. 33-3 Manual lighting via match holder

SHUTTING OFF THE UNIT

To shut off the unit, depress each valve control knob and while pressing turn it clockwise to the **OFF** position.

Always close the valve from the gas supply after each use of the unit.

WHEN USING A PORTABLE PROPANE TANK

Propane tanks are equipped with a safety shutdown device that may cause low or no gas pressure/flame at the burners if operating and lighting instructions are not followed exactly (See important note in the TROUBLESHOOTING section for more details.)

For your convenience and safety, when the control knob is turned to the on position, the gas flow indicator will change from blue to red. (Red indicates gas flow.) See Fig. 33-1.

ROTISSERIE INSTRUCTIONS

CAUTION: **WHEN USING THE BACKBURNER; KEEP THE OVEN LID CLOSED TO PREVENT HEAT LOSS, PROVIDE PROPER CONVECTION, AND PROVIDE PROPER VENTING. THIS WILL ENSURE EVEN COOKING TEMPERATURES.**

DO NOT KEEP YOUR OVEN LID OPEN DURING ROTISSING, AS THIS MAY CAUSE PERSONAL INJURY, OR IN SOME CASES, IN WINDY CONDITIONS, DAMAGE TO THE GRILL.

DO NOT USE THE ROTISSERIE MOTOR IN THE RAIN. DO NOT LEAVE THE MOTOR ON THE GRILL WHEN NOT IN USE.

1. Set the warming rack to storage position, remove the backburner cover and cooking grids (see Fig. 34-1).

Note: Remove the flavor grids only if large meats need clearance. The warming rack may also be removed if needed.

2. Slide the rotisserie motor fully onto the motor bracket located on the right side of the grill (see Fig. 34-2) and connect it to a power source (do not turn on).
3. Remove the rotisserie rod from the grill rear bracket and attach knob if necessary. Clean the rod if needed.
4. Slide the left meat holder onto the rod and tighten (see Fig. 34-3, A).
5. Then slide meat onto the rod, followed by the right meat holder (see Fig. 34-3, B and C).
6. Slide the meat into the left holder, then the right holder into meat. Tighten the right meat holder. Be sure the meat is centered and balanced as well as possible, and the holders have a good grip on the meat.
7. Hold both ends of the rod so it settles freely (do not grip tightly). Allow the rod to rotate until the heavy side of the meat rests downward.
8. The counterbalance may then be attached to even weight distribution. Slide the counterbalance onto the rod next to the right meat holder (see Fig. 34-3, D). Loosen the arm and point it upward opposite the heavy side of the meat. Tighten the arm.
9. Slide the counterbalance weight up or down the arm until the rod rotates most evenly then tighten thumb screw (see Fig. 34-3, D).
10. Insert the pointed-end of the rod into the motor drive socket (see Fig. 34-4, E). Then rest rod groove (next to the knob) into the left support bracket (see Fig. 34-4, F).
11. To keep meat drippings off the burners and to simplify cleanup, place Fire Magic drip tray liners under the meat, if desired.
12. Press the motor power switch to start.
13. Light the backburner per the lighting instructions in this manual (or on drip tray handle) and close the oven lid.

Important: Turn the backburner to low or off when stopping the rotisserie to prevent overcooking.

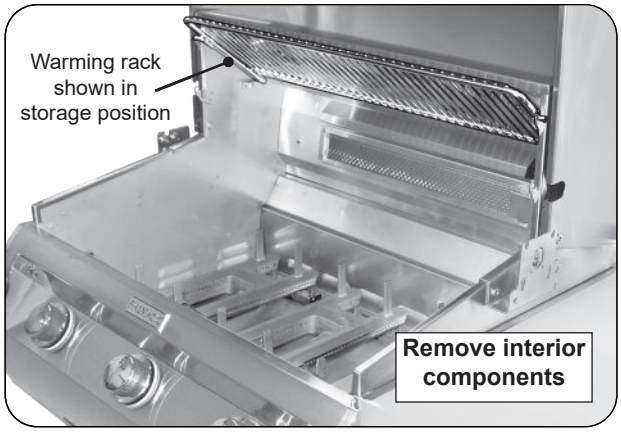

Fig. 34-1 Prepare grill for rotissing

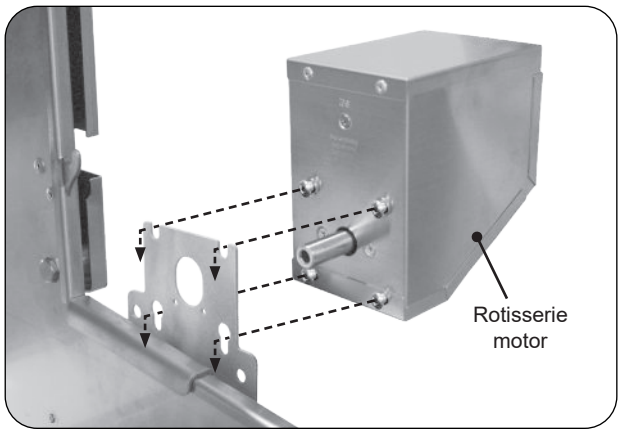

Fig. 34-2 Install rotisserie motor

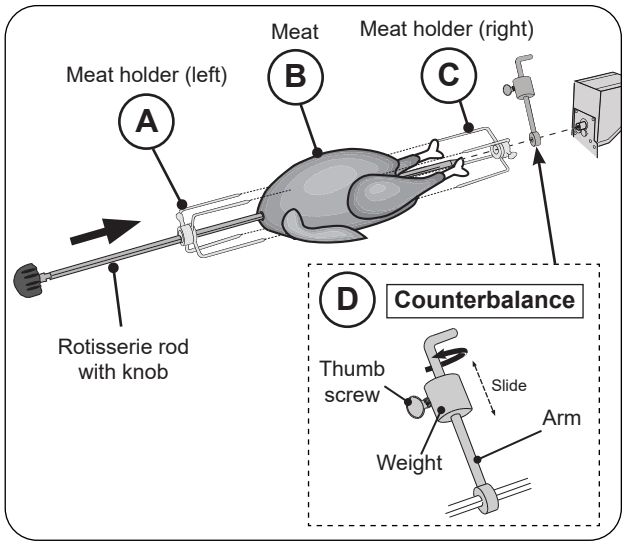

Fig. 34-3 Assemble rotisserie rod for cooking

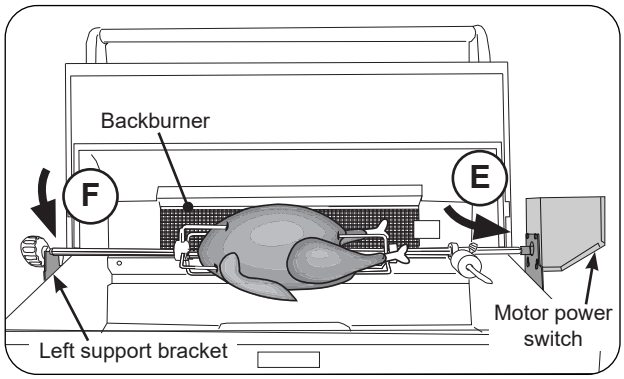

Fig. 34-4 Attach Rotisserie rod to motor

USING THE FOLDING SHELF

DROP-SHELF OPERATION

A. To lower the shelf, grasp the middle of the shelf on both sides and lift upward so that the inner lip of the shelf, along the side of the cabinet, lifts out of the locking slot. Then use the handle to allow the end of the shelf to slowly rotate down as pictured to the right.

B. To raise the shelf, perform the opposite of A. above. Grab the shelf by the handle and raise to the horizontal position. Lift slightly upward from the center of the shelf on both sides, allowing the inner lip to drop down into the locking slot and lock the shelf safely into position.

CAUTION: Do **NOT** place fingers near hinge when closing.

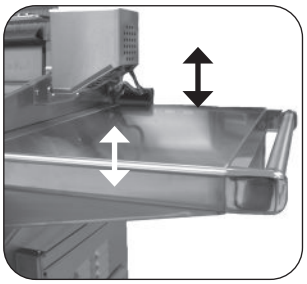

Shelf up & locked

Being lowered or raised

Shelf down

PAPER TOWEL HOLDER

This Fire Magic® unit comes with a fold-away paper towel holder.

To use the paper towel holder:

1. Make sure the collapsible shelf is extended and locked.
2. Grasp the rounded end of the paper towel holder firmly (without compressing it) and pull it away from the side of the cabinet wall so that it rotates toward the front and locks into the extended position.
3. Slide a roll of paper towels over the rounded end of the paper towel holder until the entire roll is on the holder and past the retaining lip.

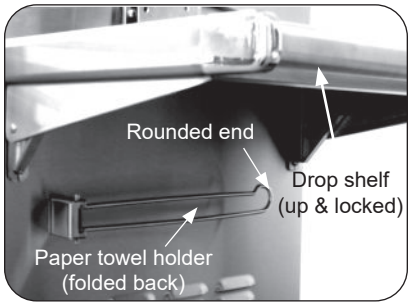

Fig. 35-2

When not in use, the rack may be folded back out of the way by firmly grasping the rounded end of the holder and rotating it back into position against the wall of the cabinet.

> **WARNING**
>
> Remove paper towels or anything flammable from the holder before folding it back against the hot wall. Placing flammable objects too close to a heat source may cause fire, property damage, or injury.

CAUTION: The paper towel holder must be folded back against the cabinet before lowering the collapsible shelf (see above). Failure to do so could result in damage to the unit.

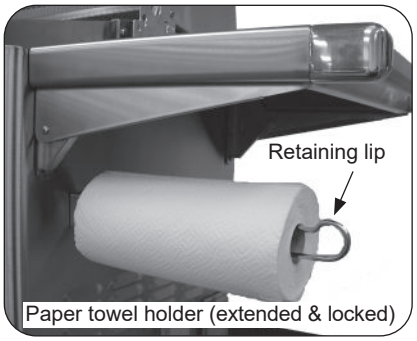

Fig. 35-3

REMOVING DRAWERS

To remove a drawer; pull it completely out. Release the drawer from the drawer slides by pressing the black lever down on the right side, and up on the left side.

To re-attach a drawer; extend the drawer slides completely and align the drawer into the slides, pushing the drawer closed. Open the drawer to verify that it has locked in place.

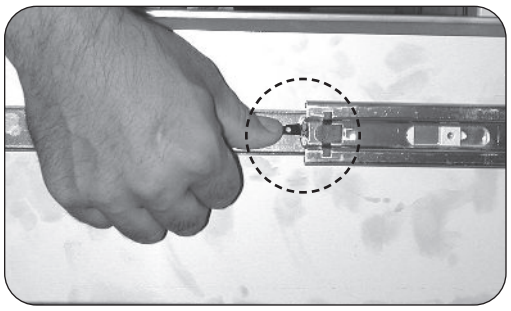

OPTIONAL POWER BURNER

POWER BURNER SAFETY

The left knob controls the inner burner and the right knob controls the outer burner

CAUTION: THE POWER BURNER IS HOT. DO NOT TOUCH WITH BARE SKIN.

Be sure the power burner has good ventilation and is free of debris and away from flammable substances before lighting.

Properly burning flames are mostly blue and are steady and spread evenly around the burner.

STAINLESS STEEL POWER BURNER COVER

Note: The cover is free-standing and is not hinged in the back.

Use the built-in handle to remove the cover.

WOK COOKING

When using a wok for stir fry or other cooking, remove the cooking grid and place the wok directly on top of the collimator. See Fig. 36-1

CAUTION: A wok has a rounded bottom and may slide on the collimator, causing hot liquid to spill out of it.

Fig. 36-1 Wok cooking

OPTIONAL INFRARED BURNER OPERATION

The infrared searing burner (optional) cooks with a powerful radiant heat.

Light the infrared burner following the LIGHTING INSTRUCTIONS found in this manual or printed on the grill's drip tray. When lighting manually, use the included wire extension match holder to safely hold a lit match. Follow these guidelines when operating the Infrared burner:

- **DO NOT place food on the cooking grid until the infrared burner glows orange (Fig. 37-3).** Drippings are heated and evaporate instead of sticking to and impairing burner function.
- **Always leave your burner on (after cooking) for an additional 5 minutes, to allow for a burnoff period. This is important to keep your burner clean and operating properly.**
- When not in use, **always** cover the infrared burner with the stainless-steel cover. This protects the burner from drippings (from other cooking), water, airborne particles, and foreign objects (Fig. 37-2).
- If loose particles build-up on the infrared burner, remove the mesh screen and use a vacuum cleaner with a brush attachment to gently clean off the ceramic surface.

Important: Clean burners allow the gas to circulate and burn over the entire heating surface for powerful and even cooking.

- Do not strike or scrape the ceramic portion of the burner as it may chip, crack, or break (Fig. 37-2).

Important: When grilling with the infrared burner, always place a cooking grid above it. The cooking grid must be removed for rotisserie cooking.

CAUTION: Never attempt to operate the infrared burner with the protective cover in place.

WARNING

Only handle the infrared burner cover when the unit is cold or with a well-insulated long-handled tool or heat resistant gloves.

Drips and particles evaporate before hitting infrared burner when cooking at the maximum setting.

Note: Flavor grids are not to be used with infrared burners.

Note: To ensure proper operation, all infrared burners (back and main) must be operated on the HI setting for a minimum of 10 minutes. Thereafter, the flame may be lowered as desired.

CAUTION: Always monitor the infrared burner flame when operated on low, as it may blow out in high-wind conditions.

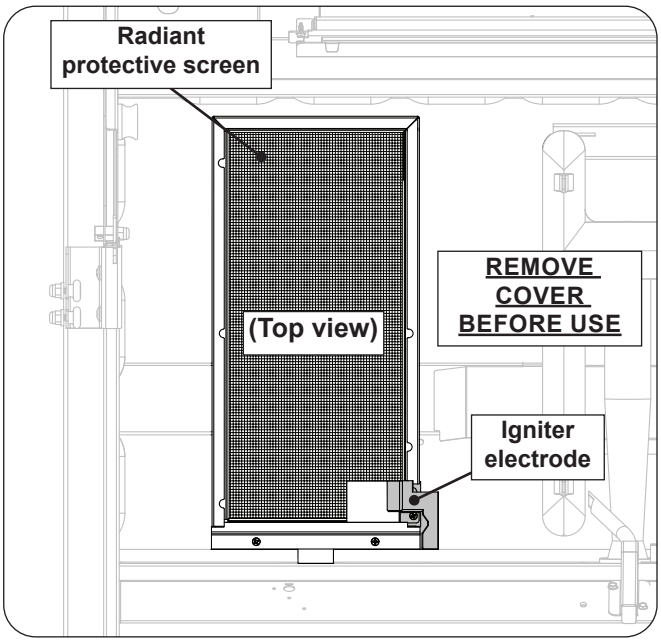

Fig. 37-1 Infrared burner overview

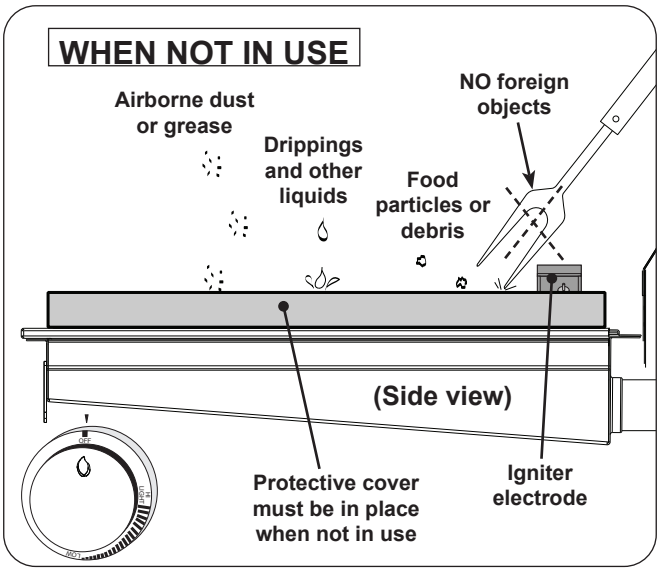

Fig. 37-2 Infrared burner - WHEN NOT IN USE

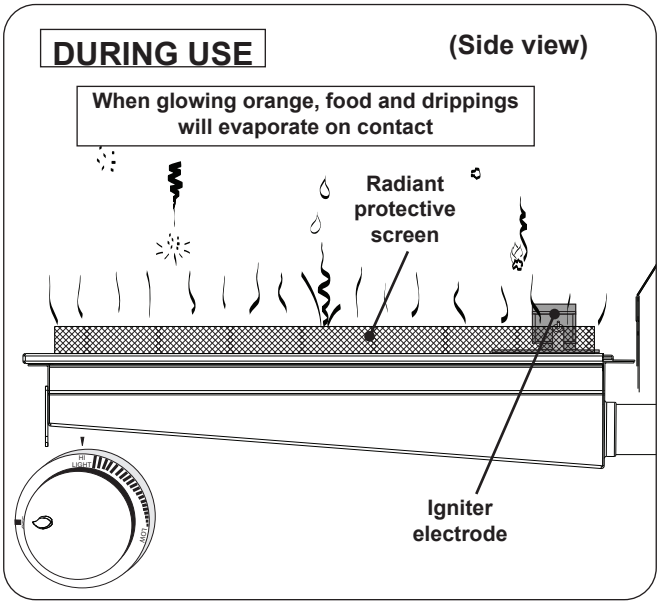

Fig. 37-3 Infrared burner - DURING USE

CHARCOAL/SMOKER BASKET (IF EQUIPPED)

CAUTION: Ensure grill is completely cool and knobs are in the OFF position.

Note: This basket is designed for use over main burners only. DO NOT USE OVER INFRARED BURNERS.

BASKET INSTALLATION

1. Place grid inside the basket frame (see Fig. 38-2).
2. Remove cooking grid and flavor grid from main burner where you wish to set basket.

Note: Use the grid/smoker lid lifter (included) to remove cooking grid.

3. Place basket onto burner in place of flavor grid. Align basket cutouts over burner supports (see Fig. 38-3 and Fig. 38-4).

If using the basket for charcoal cooking, proceed to the next section. If using the basket for smoking, skip to the SMOKING section.

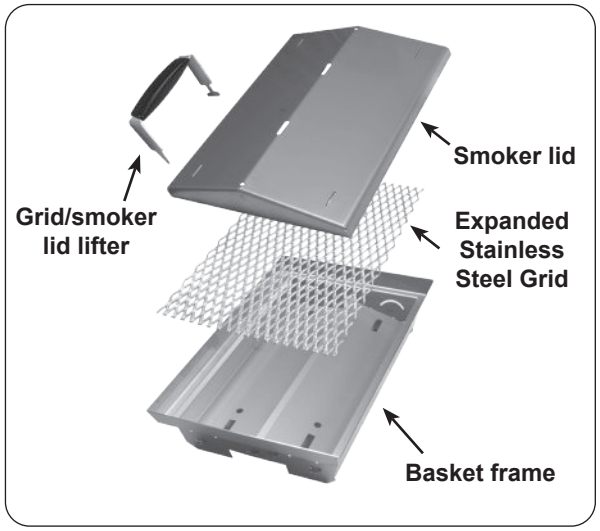

Fig. 38-1 Charcoal/smoker basket items

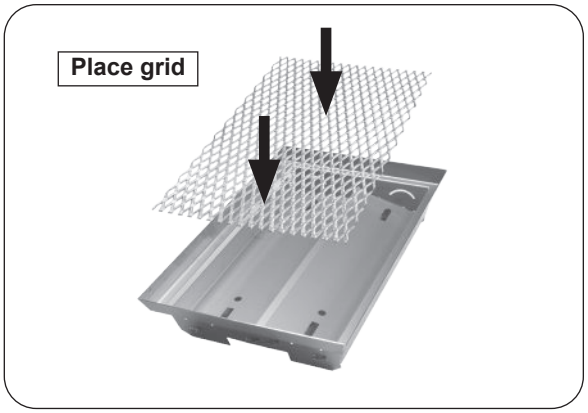

Fig. 38-2 Place grid inside basket

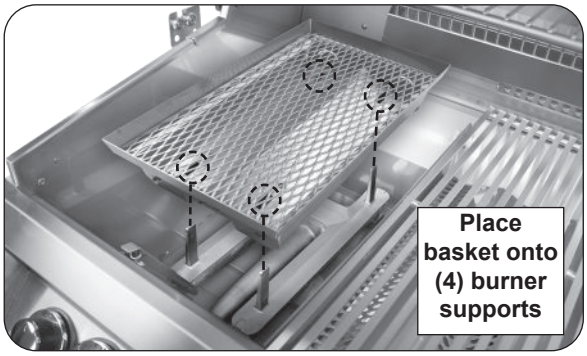

Fig. 38-3 Place basket onto burner

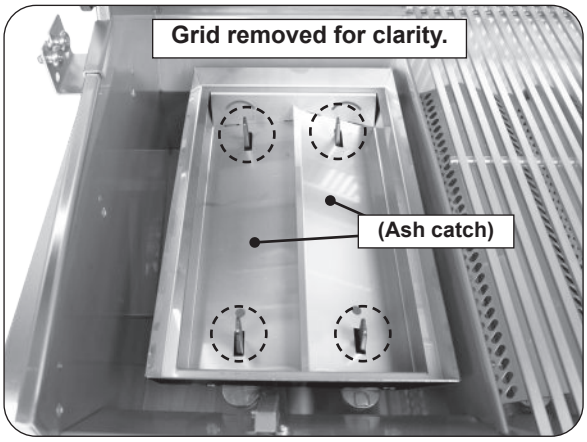

Fig. 38-4 Basket placement detail

Observe all warnings supplied with your charcoal or wood chip/chunks.

CHARCOAL COOKING

DO NOT, under any circumstances, use quick-light charcoal.

DO NOT use the smoker lid when cooking with charcoal.

1. Load charcoal onto the grid (see Fig. 39-1 and Fig. 39-2).
   - **When loading charcoal, it MUST not be loaded more than 3/4" above top edge of basket frame walls (see Fig. 39-2).**
2. Replace the cooking grid back onto the grill.
   - **Do not re-install the flavor grid.**
3. Light the burner under the basket. Keep the burner on the **HI LIGHT** setting until the charcoal remains lit without flame from the burners. The charcoal will burn with flames as it is heating up. Then shut off the burner.
   - Keep the oven hood open until ready to cook.
4. Allow the charcoal to burn until it is generating even heat and ready for cooking.
5. Cook as desired. Cooking can be done with hood open or closed.

Fig. 39-1 Load charcoal into basket

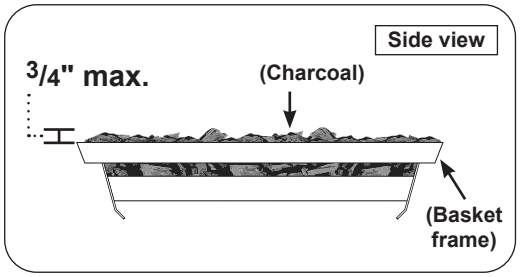

Fig. 39-2 Charcoal loading detail

SMOKING

1. Load wood chips/chunks onto grid (see Fig. 39-3 and Fig. 39-4).
   - **When loading wood chips/chunks, they MUST not be loaded above top edge of basket frame walls (see Fig. 39-4).**
   - **Wood should be pre-soaked in water for a minimum of 30 minutes. This prevents the wood from catching on fire and makes the wood last longer.**
2. Using the grid/lid lifter, install the smoker lid (see Fig. 39-5).
   - **DO NOT remove the smoker lid during use as it may cause the wood to catch on fire.**
3. Replace the cooking grid back onto the grill.
   - **Do not re-install the flavor grid.**
4. Light the burner under the basket. Keep the burner on the **HI LIGHT** setting until a steady amount of smoke is rising from the smoke vents. Then turn the burner under the basket to the **LOW** setting or the **OFF** setting as needed. Then adjust other burners; DO NOT use the HIGH setting.
   - Adjacent burners and overall cooking temperatures will affect performance of the basket. The lower the heat, the longer the smoke time. If the wood catches on fire, you may need to turn the burner under the basket to **OFF**, or lower/shutoff the other burners.
   - Keep the oven hood closed as much as possible during smoking.

Fig. 39-3 Load wood chips/chunks

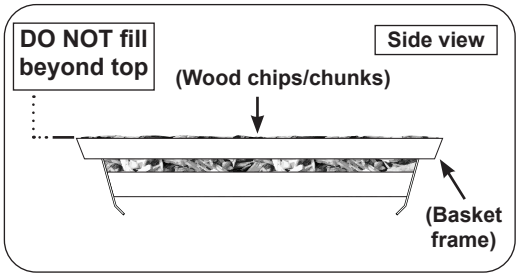

Fig. 39-4 Chips/chunks loading detail

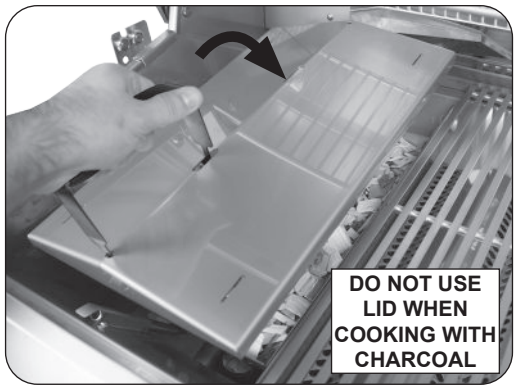

Fig. 39-5 Install lid for smoking

CLEANING

When the coals/chips/chunks are completely extinguished and the unit has cooled down, remove basket from the grill and empty ash from ash catch into a fireproof container.

Clean burners and igniters as needed. Inspect burners and igniters every time you use charcoal/smoker basket.

Note: Some distortion to grid may occur during cooling (after use). This is normal and will not affect efficiency of basket during use.

SERVICING AND CLEANING

Your grill requires regular cleaning and maintenance. Refer to these instructions for details. Performing these procedures will ensure proper operation, appearance, and safety.

WARNINGS

- Prior to servicing or cleaning make sure the unit is completely cool, the control knobs are turned to the OFF position, the gas supply is shut off, the light switch is off, and the power supply is disconnected (as applicable and unless otherwise stated).
- Wear appropriate gloves and safety glasses during any servicing or cleaning.
- DO NOT spray any cleaner or liquids on the grill when hot.
- The grill MUST be cleaned regularly to prevent grease build-up and other food deposits. A clean and well maintained grill prevents the risk of grease build-up and grease fires.
- Verify proper operation after servicing or deep cleaning.
- See INSTALLATION, OPERATION, AND SAFETY INFORMATION section for additional related information.

CLEANING YOUR GRILL

Before Each Use

1. **Inspect and clean the exterior surfaces of the unit:** With a cool grill, clean any dust, grease, splatter, or spills as needed with a damp clean cloth.

After Each Use

1. **Perform a burn-off and clean the cooking grids:** Operate the grill on high with the hood closed for 15 minutes to burn-off food and grease and allow for an easier cooking grid clean. Then turn OFF the grill and use a grill brush to clean the cooking grids of all residue. Use long-handled insulated BBQ tools and wear an insulated glove / oven mitt.
2. **Check and clean your drip tray:** When the grill is cool, carefully remove the drip tray and dispose of contents appropriately. If tray is equipped with a liner, dispose of the liner. Clean tray in a soapy water solution if needed. For tough deposits, a copper pad can be used. Rinse and dry completely. Replace a new liner and insert the tray back into the grill. Order more drip tray liners through your local dealer.
3. **Cover your grill:** Once the grill is dry and cool, cover your grill with a Fire Magic protective cover (not included).

Twice A Year (or as needed) - Deep Clean

1. **Interior of grill:** In addition to cleaning the cooking grids and drip tray, a deep clean of the interior of the grill, burners, and all components MUST be performed twice year (or as needed depending on use). Refer to the CARE, CLEANING, & MAINTENANCE GUIDE provided with your grill, or simply scan the QR code on the right.

Important: The burner ports and carry-over ports/slots MUST be kept clean to ensure proper ignition and operation. The guide provides all details on cleaning.

2. **Exterior of grill:** With a cool grill, use a grill cleaner (or a soapy water solution) and a clean cloth to remove grease and dirt from the outside of the grill. For tough deposits, a copper pad can be used. Always wipe with the grain. Rinse and dry completely. Then follow up with a stainless steel cleaner and a clean cloth. To clean the magic view window (if equipped), use a quality brand glass cleaner. DO NOT use other cleaners or chemicals.

   If this routine cleaning is not performed, the stainless steel may become dull and develop surface rust (due to use and atmospheric conditions). If left uncleaned, significant damage and pitting may occur.

Fig. 40-1 Wipe with grain

Important: DO NOT use steel wool, any other metal tools, or any other cleaners/chemicals to clean the exterior other than recommended above. Such items promote rust.

Note: Due to the nature of stainless steel, temperatures produced by the grilling process will cause discoloration. This can be reduced by routine cleaning.

For Environments High In Salt, Chloride, Or Other Corrosive Chemicals

When this grill is installed in a corrosive environment such as near the ocean (salt air), poolside (chlorine and/or pool chemicals) or any other location with exposure to high salt/chloride content or corrosive chemicals/solutions, it will be more susceptible to corrosion and MUST be maintained/cleaned more frequently.

- DO NOT store any corrosive chemicals (chlorine, hydrochloric acid, fertilizer, etc.) near your stainless steel grill.
- DO NOT allow any corrosive materials (masonry dust, debris, etc.) to settle on your stainless steel grill.
- These environments, chemicals, and materials may cause the 304 stainless steel to develop surface rust and consequently pitting. Under these conditions the grill exterior MUST be cleaned at least monthly. Inspect your grill often and clean accordingly.

Protecting Your Grill

An optional Fire Magic protective cover will protect your grill when not in use. Install the cover on a cool and dry grill. DO NOT cover a damp grill. During high humidity or after rainy conditions, remove the cover to dry trapped moisture if present. (If the cover is installed over a damp grill it can cause surface rust.)

Ensure that the INSIDE of the cover is DRY before putting it back on the grill.

REPLACING HALOGEN BULBS

Your grill is engineered with the conveniences of electrical power for illuminating and igniting the grill.

To replace any interior oven light, follow the instructions below.

Important: ONLY REPLACE WITH 12V / 10 WATT HALOGEN BULB(S).

WARNING

To protect from potentially sharp sheet metal and glass, wear gloves and safety glasses during this procedure.

1. Turn all burner control knobs to the **OFF** position and shut off the gas supply to the grill at the source.
2. Disconnect supply of external electrical power to the grill.

CAUTION: Wait for the grill, oven, lens, light bulb, and fixture to cool before proceeding to the next step.

3. Open the oven lid.

Important: Place one hand directly below the glass lens and prepare to catch it when it is detached.

4. Carefully insert a standard flat head screwdriver or thin plastic spatula between the glass lens and the stainless steel on which the light is mounted and gently pry the glass lens out in such a way that the stainless steel is not scratched (twisting the screwdriver handle, for instance). Catch the lens and set it safely aside.

Note: You may wish to take this opportunity to clean the lens with a standard household window cleaner and then dry it completely.

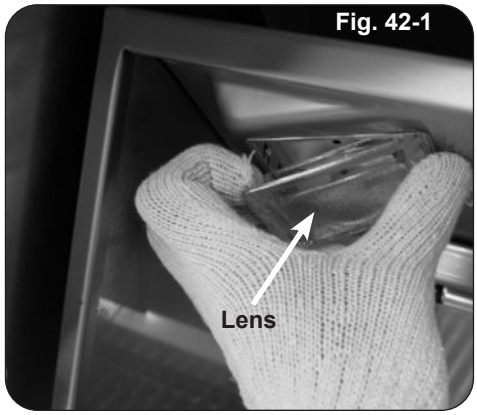

Fig. 42-1

5. Wearing a pair of gloves, reach into the fixture, gently grab the bulb, and pull it straight out of the fixture so that the two pins at the base of the bulb come all the way out.

Important: Bulb is halogen. DO NOT TOUCH with bare hands. Oils from hands drastically reduce bulb life.

Note: It may be helpful to rock the bulb gently backward and forward while pulling it out.

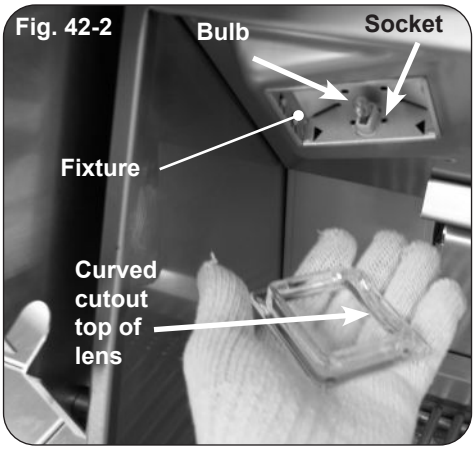

Fig. 42-2

6. Inspect the old bulb for broken glass or filament.

Note: It may be beneficial to test a suspect bulb in one of the other light fixtures known to be working and turn the power back on to be certain the bulb is actually not working.

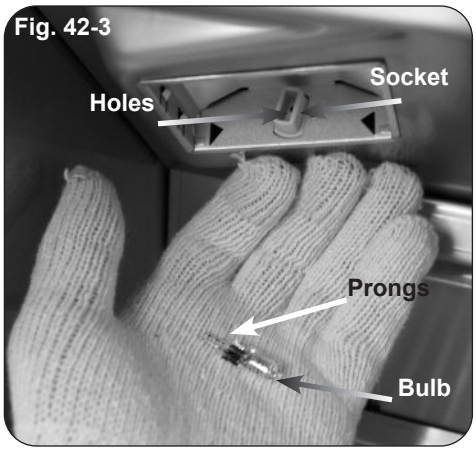

Fig. 42-3

7. Insert the new **12V / 10 watt** halogen bulb into the socket so that both pins slide all the way into the two holes in the bottom of the socket.
8. Place the lens back into the fixture opening with the curved cutout on the bottom and snap it back into place.

CONTROL PANEL REMOVAL

1. **Turn the control knob(s) to the OFF position and turn off the gas supply to the unit.**
2. Turn off the light switch and disconnect the power supply from the power source.
3. Pull the control knob(s) from the stems and set aside.
4. Slowly lift the lighted bezels to clear the valve stems, and let rest as shown in Fig. 43-1.
5. Remove the drip tray.
6. Using a Phillips screwdriver, unscrew and remove the control panel fastener screws and washers (located on the left and right front face of the control panel). Retain the screws for later re-installation.
7. Carefully open the control panel by lifting and pulling the control panel from the frame, allowing it to rest on the internal chain(s).

Important: When opening, take caution to not damage any wiring.

8. If wire disconnections are required, reference the wire diagram in the MODEL SPECIFICATIONS section in this instruction manual or the wire diagram label affixed to the inside of the control panel.

Note: Secure any disconnected wires (coming from the inside of the unit) to prevent them from falling in.

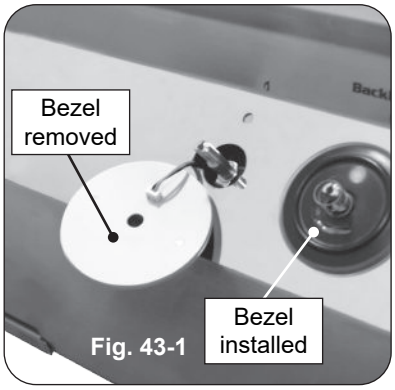

Fig. 43-1

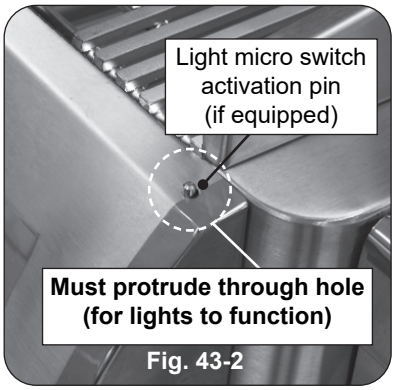

Fig. 43-2

Note: Whenever reconnecting <u>any wires</u>, apply a small amount of dielectric grease to the <u>male</u> connector, then make the connection. This will ensure conductivity and prevent moisture from affecting the contact.

Important: **To ensure the interior oven lights function:** when reinstalling the control panel, set it back over the front lip of the grill so that the light micro switch activation pin protrudes through the hole on the upper right of the control panel (if applicable). See Fig. 43-2.

Important: During reinstallation; prior to opening the gas shut-off valve, be sure the control knob(s) are in the OFF position.

MAIN BURNER REMOVAL

1. Remove the cooking grid and flavor grid from above the burner that is to be removed and set them aside.
2. Locate and remove the cotter pin from the left or right rear burner anchoring peg by pulling it straight out of the cotter pin hole using fingers or needle-nose pliers. See Fig. 44-1.
3. Carefully lift the burner from the burner support and out from the hole in the forward fire wall. See Fig. 44-2.
4. To replace the burner, slide the open cylindrical end of the burner around the orifice, enveloping it and centering on it. Then lower the back end anchor pegs into the burner support anchor peg holes.

Note: It is critical to the continued safe functioning of the burners that the orifices are centered and completely inside the burner gas inlets.

5. Re-install the cotter pin into the rear burner anchor peg using fingers or needle-nose pliers.
6. Replace the flavor grid and cooking grid.
7. Repeat these steps for the other burner(s), if needed.

INFRARED BURNER REMOVAL (if equipped)

To completely remove the infrared burner, follow the steps above for the main burner removal with the addition of disconnecting the infrared electrode assembly prior to lifting the burner. See Fig. 44-3.

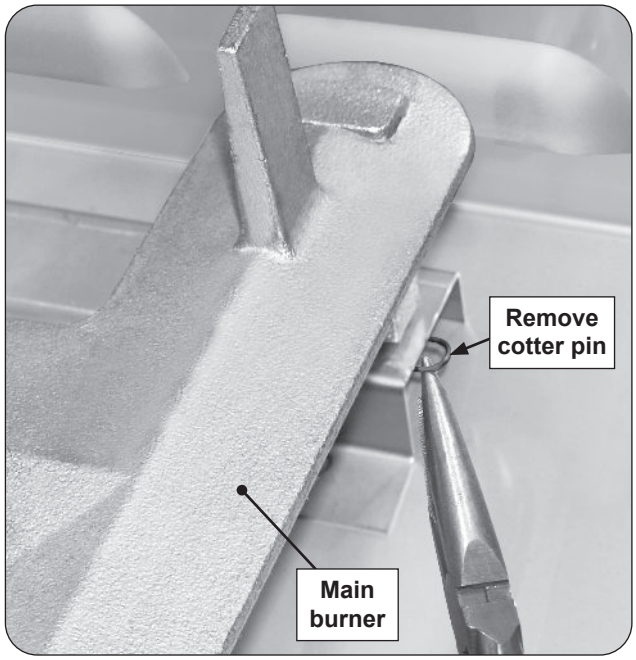

Fig. 44-1 Main burner removal

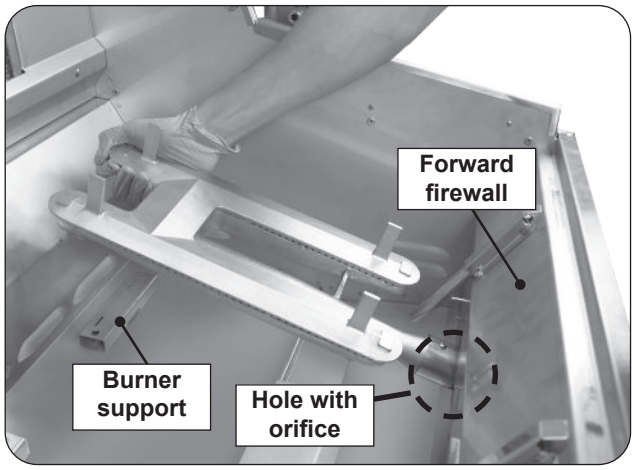

Fig. 44-2 Remove burners

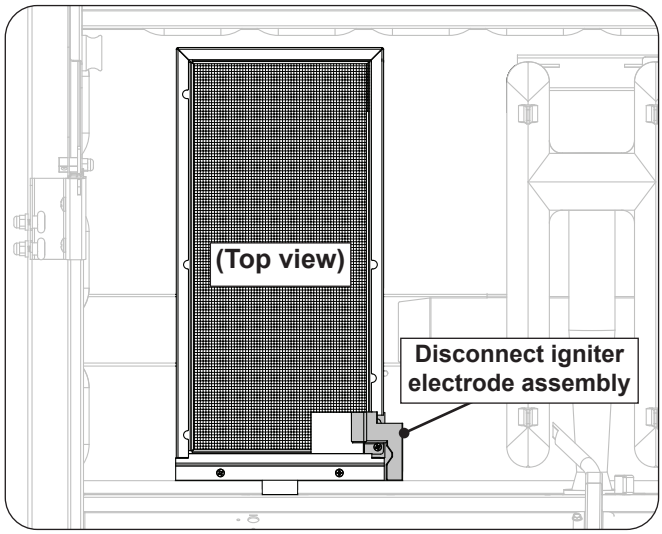

Fig. 44-3 Infrared burner removal

POWER BURNER INTERIOR PROTECTION PLATE REMOVAL (if equipped)

1. Remove the cooking grid.
2. Lift up the interior protection plate from the left side, then lift up from the right side (see Fig. 45-1, A and B).

Note: If needed, insert a screwdriver into the provided cutouts to assist in detaching the plate.

3. While lifting the plate upward, flex the collimator inward to completely free the protection plate (see Fig. 45-1, C).
4. Reverse these steps to install the protection plate.

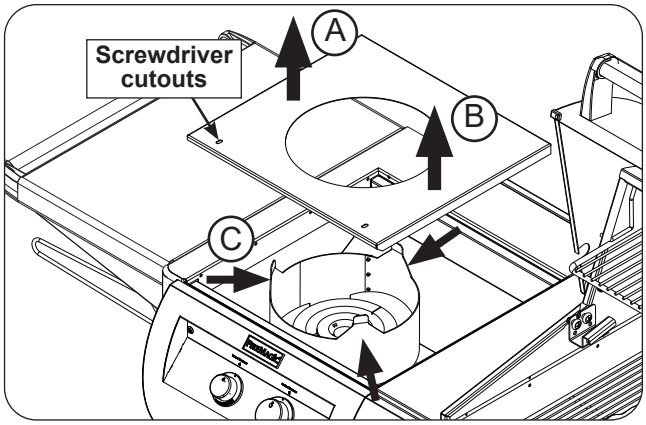

Fig. 45-1 Interior protection plate removal

POWER BURNER FLAME COLLIMATOR REMOVAL (if equipped)

1. Remove the cooking grid and interior protection plate (see section above).
2. Squeeze the collimator to detach the rear tab from the rear liner as shown in Fig. 45-2, A, and lift up the rear portion of the collimator.
3. Detach the collimator from the front collimator support and completely remove the collimator as shown in Fig. 45-2, B.
4. Reverse these steps to install the collimator

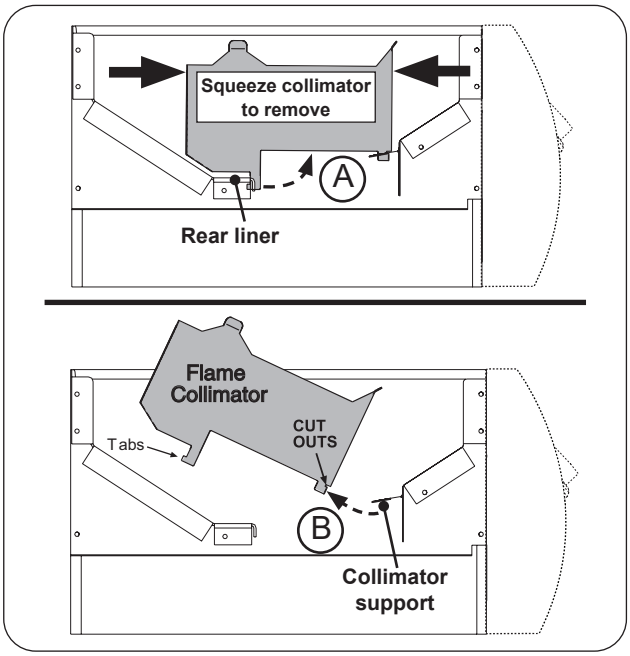

Fig. 45-2 Flame collimator removal

POWER BURNER REMOVAL (if equipped)

1. Remove the cooking grid, interior protection plate, and flame collimator (see sections above).
2. To completely free the burner, the igniter assembly will need to first be detached from the burner.
3. Carefully lift the burner upward and outward, pulling it away from the orifices.

Note: Be sure not to lose the air shutters or air shutter springs which may become detached when the burner is removed.

4. To re-install, position the air shutter spring and air shutter over the orifice holder fitting, between the burner and the heat shield, in the order and position shown in Fig. 45-3. Do for both burner necks.
5. Carefully place the burner stud back in the locator hole so that the brass orifices and orifice holder fittings project into the burner gas inlets. When the burner stud fits in the locator hole, the orifices are in alignment.

Note: It is <u>critical</u> to the continued safe functioning of the burners that the orifices are centered and completely inside the burner gas inlets.

6. Reattach the igniter assembly (if detached).

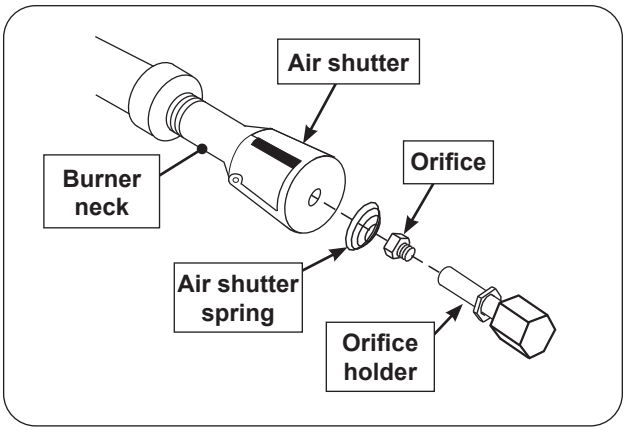

Fig. 45-3 Burner removal diagram

POWER SUPPLY FUSE REPLACEMENT

1. The power supply box is located on the right side of the grill (reference the PARTS LIST).
2. Using a phillips screwdriver, remove the 6 large screws found on the cover of the power supply box (see Fig. 46-1).
3. Slightly pull out the box to expose the wiring, and disconnect the wire harness (see Fig. 46-2). Completely remove the box from the grill for ease of fuse replacement.
4. Remove the 4 small screws found on the cover of the power supply box (see Fig. 46-3).

Note: The 2 center screws do not need to be removed.

5. Carefully open the box by pulling its cover away. You may need to feed the wire harness into the box to provide enough slack to open on the other end. Then “push in and twist” the fuse holder (red wire), exposing the fuse. See Fig. 46-4.
6. Replace the fuse accordingly (3AG 1 AMP Slow Blow).

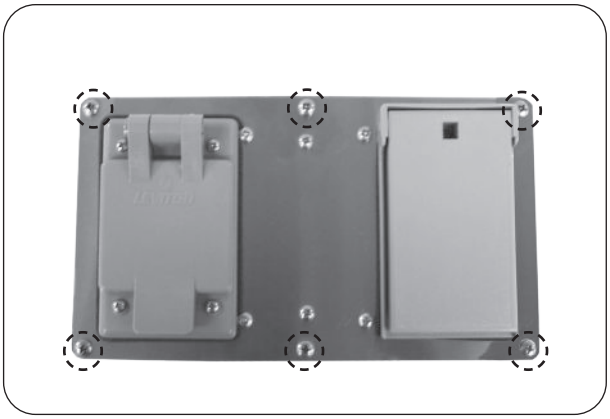

Fig. 46-1 Remove 6 large screws

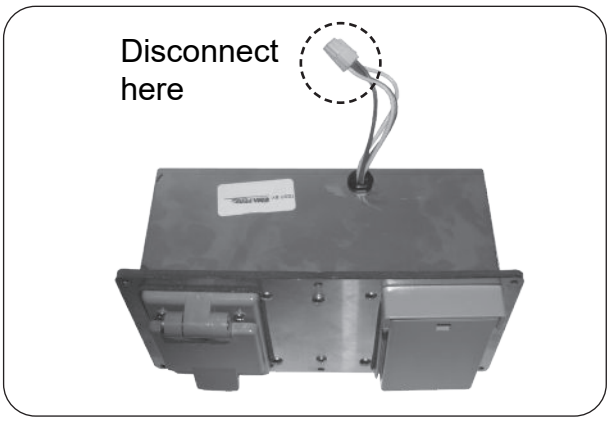

Fig. 46-2 Slightly pull out box and disconnect wire harness

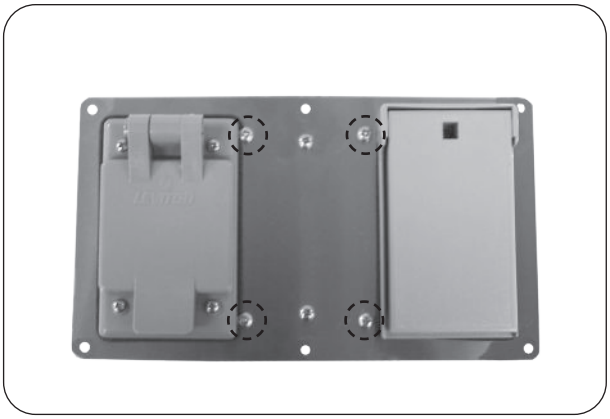

Fig. 46-3 Remove 4 small screws

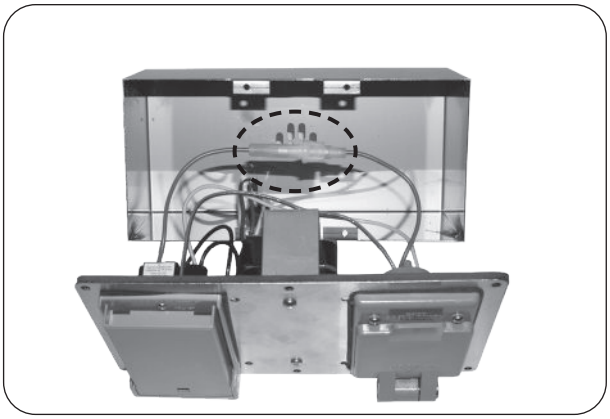

Fig. 46-4 Carefully open box and replace fuse (red wire)

CONVERT GAS TYPE / CHECK BURNER ORIFICES

WHEN CONVERTING TO A NEW GAS TYPE, THE ENCLOSURE MUST HAVE PROPER VENTILATION FOR THE NEW GAS TYPE. See the ENCLOSURE REQUIREMENTS section for complete details.

CAUTION: Make sure the grill is at a safe temperature and isolated from gas and electrical supplies before beginning.

For your safety, exercise caution, and make sure you have adequate hand protection, such as gloves, when handling metal parts.

Apply Conversion Label

This grill comes from the factory configured for one type of gas as marked on the label inside the cabinet.

When the grill is converted, the label for the new gas (included at original shipping) MUST be filled out and applied next to the existing label mentioned above.

Convert Regulator

The gas regulator, located behind the control panel, must be set for the type of gas used to fuel the grill. To check the regulator setting, remove the cap in the center of the regulator (Fig. 47-1, A). Holding the cap vertical (see Fig. 47-1, B), the letters at the bottom of the plastic stalk indicate the gas type for which the regulator is currently configured.

If the text on the bottom of the regulator stalk does not match the gas type connected to the grill, remove the stalk from the cap, invert, and replace into center of cap. Replace cap on the regulator, screwing down until snug.

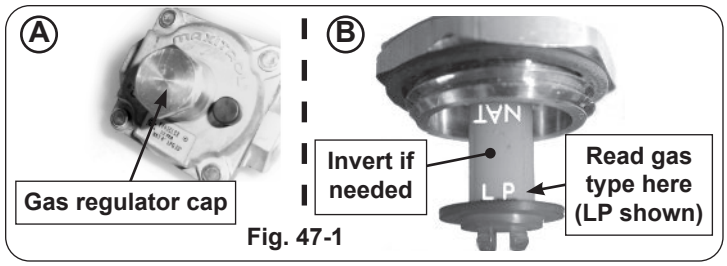

Fig. 47-1

Convert Gas Orifices

When converting the grill to a different gas type, each burner's orifice must be replaced with the corresponding orifice for the new gas.

See Table 1 to determine the proper orifice sizes for each burner.

See the following sections for details on orifice conversion.

Important: It is critical to the operation of each burner that its orifice be fully inserted into the center of its orifice opening.

WARNING

HAZARDOUS OVERHEATING WILL OCCUR IF A NATURAL-GAS ORIFICE IS USED WITH PROPANE GAS.

Connect To New Gas Supply

Plumb the unit as appropriate for the new gas supply. (Additional components may be needed for your specific setup.) **Be sure to leak test at all connections.**

Natural-gas to propane-gas conversions using a tank internal to a portable grill requires installation of a propane tank holder (not included). This tank holder must be purchased separately from the manufacturer. See Table 2.

Convert/Check Main Burner Orifices

1. Remove the cooking grids and flavor grids and set them aside.
2. Remove the burners (see the BURNER REMOVAL section for step-by-step instructions).
3. Use a $^3/_8$" hex nut driver to remove the exposed orifices (Fig. 47-3). Check orifices. If needed, replace them with the correct orifices for the new gas.
4. Replace the burners (see the BURNER REMOVAL section).

Note: It is critical to the continued safe functioning of the burners that the orifices are centered and completely inside the burner gas inlets.

5. Replace the flavor grids and the cooking grids.

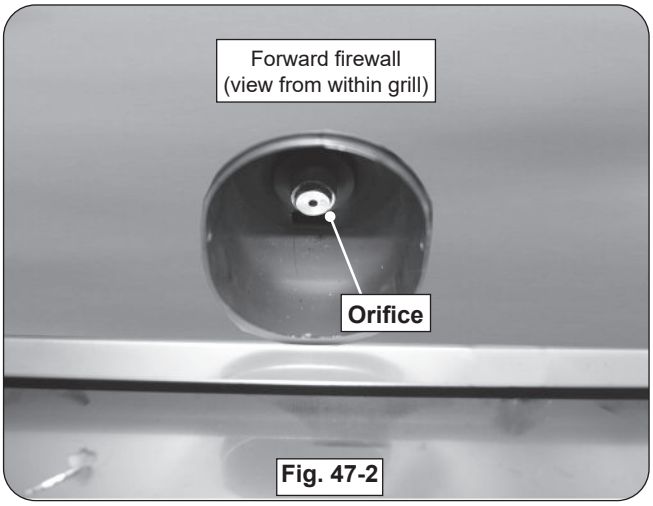

Fig. 47-2

Convert/Check Backburner Orifice

1. Remove the warming rack if installed and set it aside.
2. Remove the backburner cover (lift from the bottom; first upward, then outward.

3. Remove the electrode cover by first removing the screw, sliding the cover to the right, then outward. See Fig. 48-1.
4. Unfasten the two backburner screws (found on the left side of the backburner) using a $^1/_4$" nut driver and set them aside. See Fig. 48-2.
5. Remove the backburner by lifting the left side outward and to the left. See Fig. 48-3.

Note: The top deflector plate may become loose when removing the backburner. Ensure the deflector is properly in place when reinstalling the backburner (See Fig. 48-3).

6. Use a $^3/_8$" hex nut driver to remove the exposed orifice (Fig. 48-4). Check orifice. If needed, replace it with the correct orifice for the new gas.
7. Replace the backburner assembly and fasten the two screws using a $^1/_4$" nut driver.
8. Replace the backburner cover and warming rack.

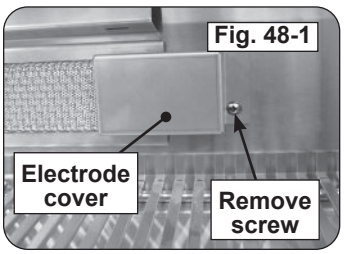

Fig. 48-1

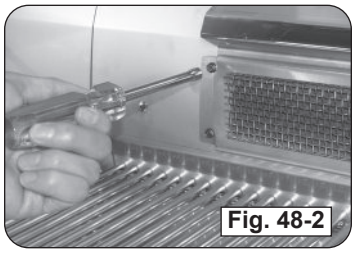
Fig. 48-2

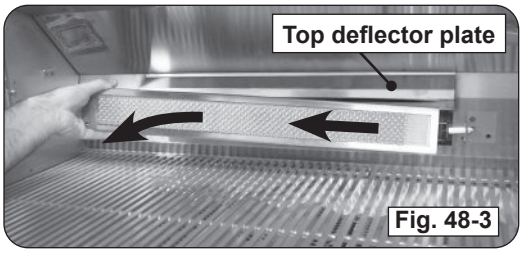

Fig. 48-3

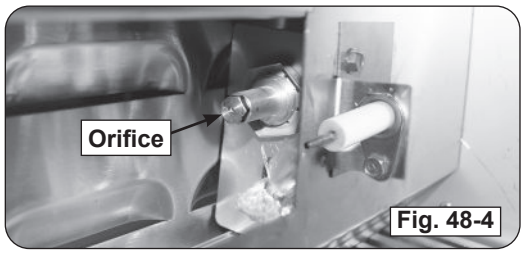

Fig. 48-4

Convert/Check Infrared Burner Orifice (if equipped)

1. Remove the cooking grid from above the burner.
2. Using a Phillips-head screwdriver, unscrew and detach the electrode assembly from the infrared burner body.
3. Remove the infrared burner by lifting the back of the burner up so that both tabs are freed from their slots, then lift the burner toward the back of the fire box and upward. Set the burner aside.
4. Use a $^3/_8$" hex nut driver to remove the exposed orifice. Check orifice. If needed, replace it with the correct orifice for the new gas.
5. Replace the infrared burner by first sliding it over the orifice, then lowering the two tabs under the back of the burner into the slots in the back burner rest.
6. Reattach the electrode assembly and replace the grid so that the cutout section is in front.

Convert/Check Side Burner Orifice

1. Lift the side burner lid. Then remove the sideburner grid and side burner cap and set them aside.
2. Locate and remove the cotter pin from the side burner assembly underneath the side burner shelf using needle-nose pliers. Set it aside.

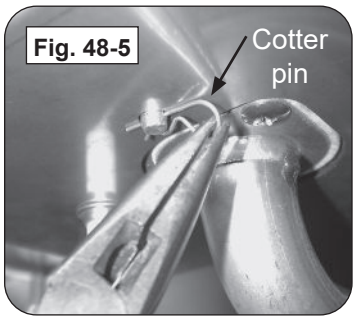

Fig. 48-5

3. From the top of the side burner shelf, lift the side burner upward while rotating the attached tubing underneath away from the orifice near the cart wall. Set it aside.
4. Use a $^3/_8$" hex nut driver to remove the exposed orifice. Check orifice. If needed, replace it with the correct orifice for the new gas.

Note: To protect the manifold threads when placing the new orifice, start the threading manually, and then tighten with the nut driver.

5. Rotate the burner assembly back into place over the orifice and ensure it is firmly seated in the shelf.
6. Reinsert the cotter pin underneath the side burner assembly using needle-nose pliers. It may be necessary to push downward on the burner assembly from above to fully expose the cotter pin hole. Rotate the inserted cotter pin so that it is flush with the underside of the shelf.
7. Replace the burner cap by centering it on the side burner assembly and ensuring it drops in place.
8. Replace the side burner grid with the grating running front to back so that it drops fully down onto the shelf.

Convert/Check Double Side Burner Orifices (if equipped)

1. Remove sideburner lid and lift off cooking grid.
2. Remove the double side burner control panel. Reference (see CONTROL PANEL REMOVAL section).
3. Reach up under the burner support and remove the cotter pin (see Fig. 49-1), located at the rear of the burner pipe.
4. Remove the burner cap and carefully lift the burner up and out, clearing the ceramic electrode (see Fig. 49-2), and pulling the burner tube away from the orifice, located on the end of the orifice holder on the left side of the unit (see Fig. 49-3).

Note: You do not have to lift the burner completely out of the unit to access the orifice.

5. Using a $^3/_8$" socket, remove orifice from the orifice holder (see Fig. 49-3) and check the number stamped on the orifice face.
6. If an orifice change is necessary, replace the orifice with the correct sized one.
7. Replace the sideburner tube over the orifice, aligning the burner over the electrode, taking care not to detach it from the wire.
8. Replace the cotter pin (underneath burner). Replace the burner cap.
9. Repeat steps **3** through **8** for the second burner, then replace the grid and lid.

Note: If converting the gas type, see the CONVERT REGULATOR section before replacing the control panel.

10. Once all adjustments are complete, be sure the unit is off, then replace the control panel, bezels, and knobs.

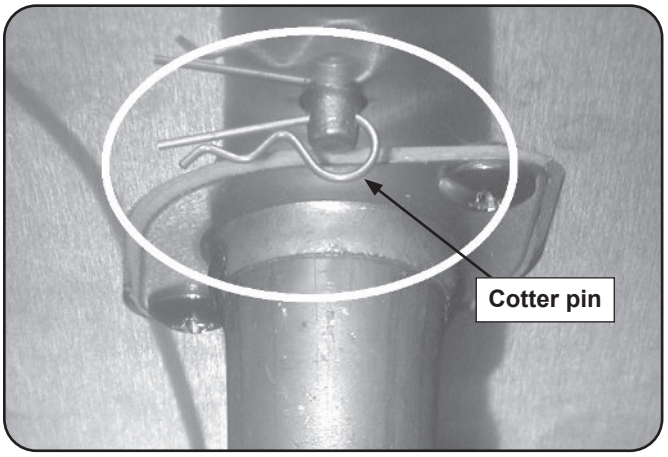

Fig. 49-1 Remove cotter pin

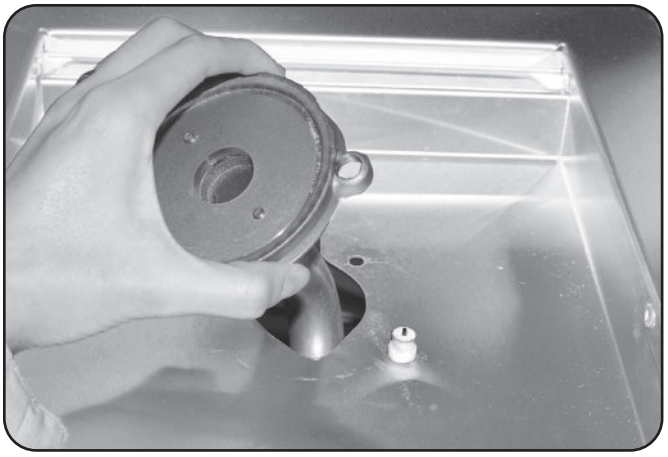

Fig. 49-2 Lift burner

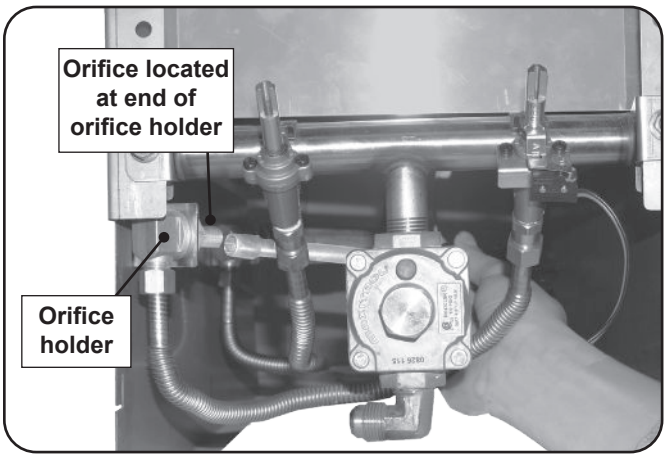

Fig. 49-3 Locate orifice

Convert/Check Power Burner Orifices (if equipped)

1. Remove the burner assembly. See the POWER BURNER REMOVAL section for details.
2. Locate the orifices. The orifice size is stamped on each orifice face (see Fig. 50-1).
3. If orifice changes are necessary, replace the orifices with the correct-sizes for both the inner and outer burner necks.
4. Replace the burner assembly.

Note: If converting the gas type, see the CONVERT REGULATOR section before replacing the control panel.

5. Replace the flame collimator, interior protection plate, cooking grid, and lid.

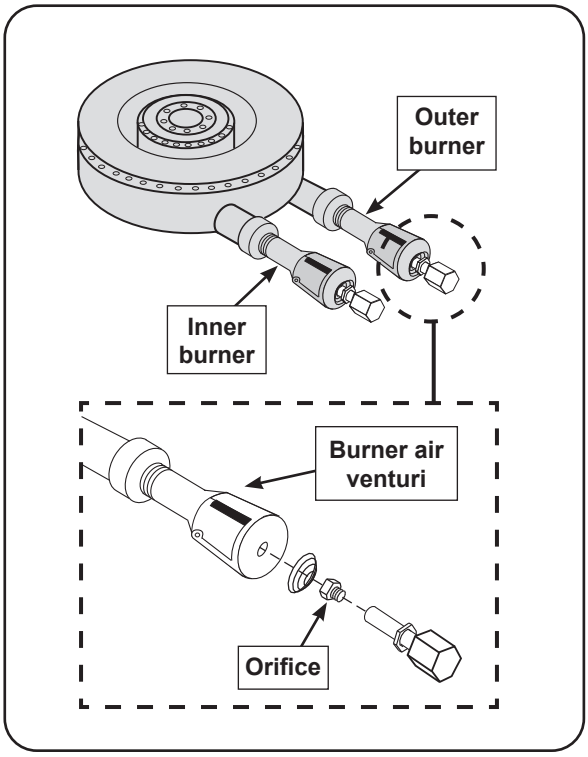

Fig. 50-1 Burner orifice orientation

AIR SHUTTER ADJUSTMENT / BURNER FLAME INSPECTION

Important: Air shutters are preset at the factory (see Table 1 in MODEL SPECIFICATIONS). However, gas conversion, altitude, or other local conditions may make it necessary to adjust the air shutters.

Note: Infrared and backburner air shutters are not adjustable.

Note: To verify proper settings, the flames of the burners should be visually checked for proper flame appearance and behavior. Light the grill with the burner(s) on HI setting. Allow at least 2 minutes to burn. See below and Fig. 51-1. The flames should:

- be blue and stable with little to no yellow tips
- burn quietly, and appear to touch the burner

If the flames appear unstable, yellow, noisy, or lift away from the burner, locate the appropriate section for your burner type, and follow the steps.

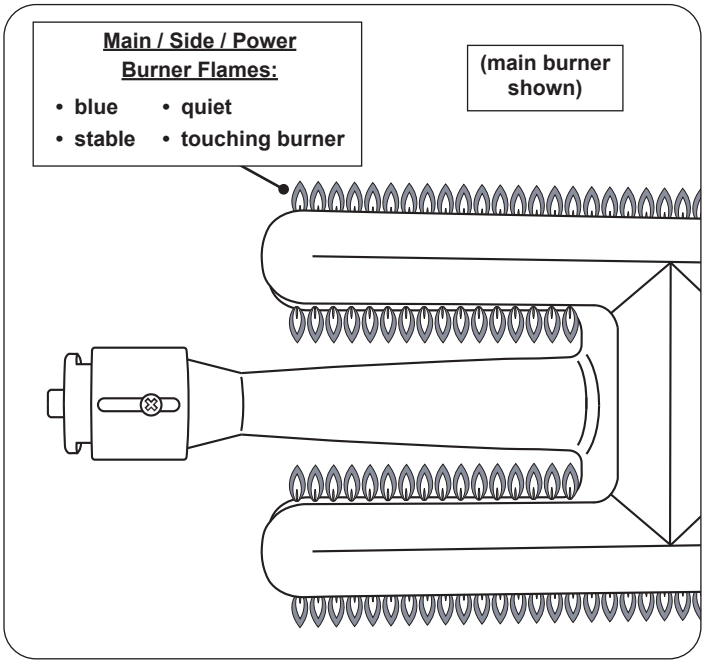

Fig. 51-1 Proper flame appearance

Main Burner

Begin with a completely cool unit. Remove the burners (see BURNER REMOVAL section). First ensure the burner orifice, ports, venturi tubes, and air shutter openings are all clear of any insect or insect nests. If they are blocked, clean them, reinstall the burners, and reinspect the flames. If adjustment is still needed, **allow the unit to cool**, remove the burner, and proceed to the steps below.

1. To adjust the air shutter, loosen the adjustment screw with a Phillips screwdriver. Then slide the shutter to open or close it. See Fig. 51-2 for details.
   - Begin with the appropriate factory setting for your model (see Table 1 if needed).
   - If the flames were excessively yellow (insufficient air), open the shutter to allow more air to the burner. If the flames were noisy and lifting off the burner in some areas, close the shutter to allow less air to the burner. Adjust accordingly.

Note: Make minimal adjustments. Very small changes result in major changes in flame appearance.

2. Reinstall the burner, light the grill with the burner on HI, and observe the flames. If needed, allow the grill to completely cool, and repeat the adjustment process until the proper flame is achieved.
3. Once finished, allow the unit to completely cool, remove the burner, and tighten the adjustment screw. Reinstall the burner.
4. Repeat for all other main burners as needed.
5. Reinstall all other components that were removed.

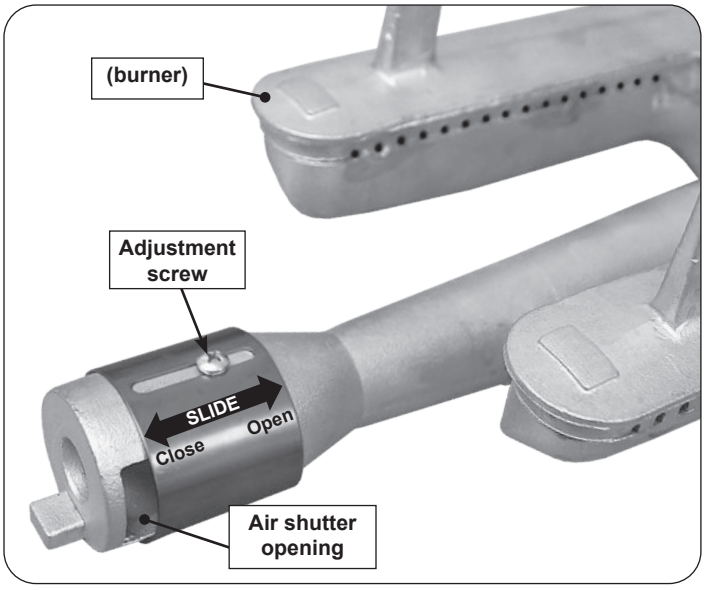

Fig. 51-2 Main burner air shutter adjustment detail

Side Burner (if equipped)

Begin with a completely cool grill. Remove the burner (see CONVERT/CHECK SIDE BURNER ORIFICE in the CONVERT GAS TYPE / CHECK BURNER ORIFICES section). First ensure the burner orifice, ports, venturi tube, and air shutter are all clear of any insect or insect nests. If they are blocked, clean them, reinstall the burner and burner cap, and reinspect the flames. If adjustment is still needed, proceed to the steps below.

Note: The side burner air shutter (located underneath the sideburner shelf on the left side of the unit) can safely and easily be adjusted while the side burner is lit.

CAUTION: Do not touch the side burner or the shelf around it. They will be hot while adjusting the side burner air shutter.

1. To adjust the air shutter, first light the side burner on HI.
2. Loosen the adjustment screw with a flathead screwdriver, then carefully rotate the shutter to open or close it. See Fig. 52-1 for details.
   - Begin with the appropriate factory setting for your model (see Table 1 if needed).
   - If the flames are excessively yellow (insufficient air), open the shutter to allow more air to the burner. If the flames are noisy and lifting off the burner in some areas, close the shutter to allow less air to the burner. Adjust accordingly.

Note: Make minimal adjustments. Very small changes result in major changes in flame appearance.

3. Once finished, carefully re-tighten the adjustment screw and shut off the side burner.
4. Allow the unit to cool completely, then reinstall the sideburner grid.

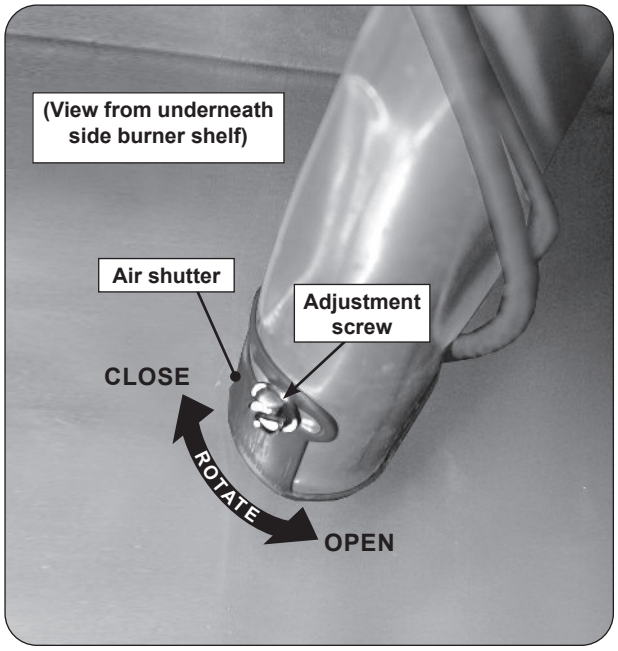

Fig. 52-1 Side burner air shutter adjustment detail

Double Side Burner (if equipped)

Begin with a completely cool grill. Remove the burners (see CONVERT/CHECK DOUBLE SIDE BURNER ORIFICE in the CONVERT GAS TYPE / CHECK BURNER ORIFICES section). First ensure the burner orifices, ports, venturi tubes, and air shutters are all clear of any insect or insect nests. If they are blocked, clean them, and reinstall the burners and burner caps. With the control panel open, install the control knobs onto the valve stems, light the burners on HI, and reinspect the flames. If adjustment is still needed, proceed to the steps below.

Note: The air shutters are located at the end of the burner assemblies, behind the control panel. They can safely and easily be adjusted while the unit is lit.

CAUTION: Do not touch the double side burner surrounding top area, as it will be hot while adjusting the air shutter.

1. To adjust the front burner air shutter, first light the burner on HI.
2. Loosen the adjustment screw with a screwdriver, then carefully rotate the shutter to open or close it. See Fig. 53-1 for details.
   - Begin with the appropriate factory setting for your model (see Table 1 if needed).
   - If the flames are excessively yellow (insufficient air), open the shutter to allow more air to the burner. If the flames are noisy and lifting off the burner in some areas, close the shutter to allow less air to the burner. Adjust accordingly.

Note: Make minimal adjustments. Very small changes result in major changes in flame appearance.

3. Once finished, carefully re-tighten the adjustment screw and shut off the burner.
4. Repeat this process for the rear burner.

Note: Should you have difficulty accessing the rear burner air shutter, you may shut down, remove the rear burner (when cool), then adjust the air shutter to the same opening as the already adjusted front burner. Be sure to properly re-install rear burner when complete.

5. Once finished with both burners, allow the unit to cool completely, then remove the knobs. Replace the control panel, bezels, and knobs.

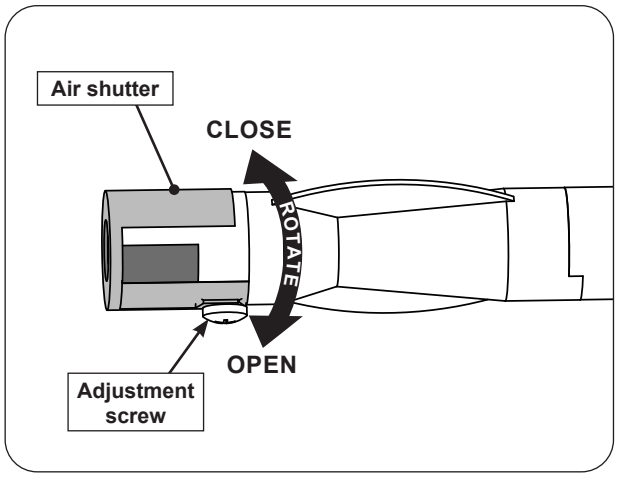

Fig. 53-1 Double side burner air shutter adjustment detail

Power Burner (if equipped)

Begin with a completely cool grill. Remove the burner (see CONVERT/CHECK POWER BURNER ORIFICE in the CONVERT GAS TYPE / CHECK BURNER ORIFICES section). First ensure the burner orifices, ports, necks, and air shutters are all clear of any insect or insect nests. If they are blocked, clean them, reinstall the burner, and reinspect the flames. If adjustment is still needed, **allow the unit to cool**, remove the burner, and proceed to the steps below.

1. To adjust the air shutters, rotate the shutters to open or close them. See Fig. 54-1 for details.
   - Begin with the appropriate factory settings for your model (see Table 1 if needed).
   - If the flames were excessively yellow (insufficient air), open the shutters to allow more air to the burners. If the flames were noisy and lifting off the burners in some areas, close the shutters to allow less air to the burners. Adjust accordingly.

Note: Make minimal adjustments. Very small changes result in major changes in flame appearance.

2. Reinstall the burner, light the power burner with the burner on HI, and observe the flames. If needed, allow the unit to completely cool, and repeat the adjustment process until the proper flame is achieved.
3. Once finished, allow the unit to completely cool and replace all other components that were removed.

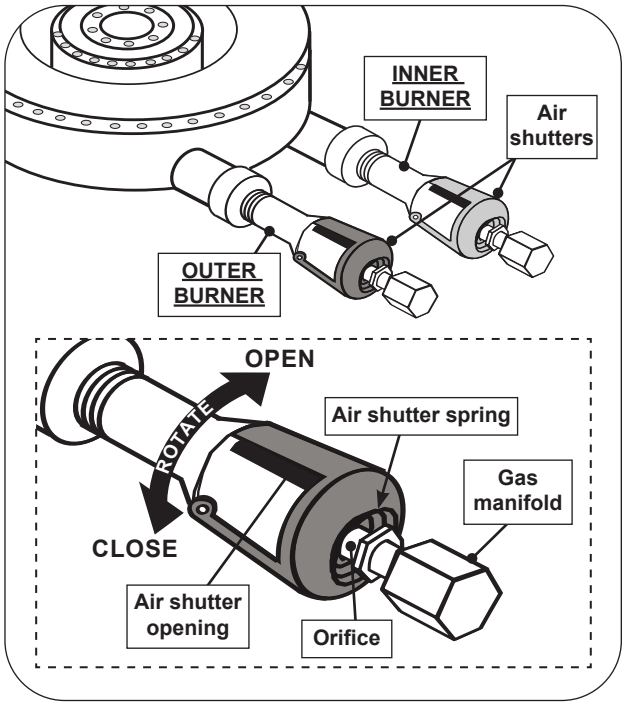

Fig. 54-1 Power burner air shutter adjustment detail

VALVE "LOW" SETTING ADJUSTMENT

Stability of the "low" setting on all burners may vary due to wind direction, appliance configuration, and position. If your burner goes out when set on low, the valve "low" setting needs adjustment.

Note: Adjustments MUST only be performed by a qualified professional service technician.

To adjust the valve "low" setting:

1. **Ensure the unit is completely cool and the knobs are in the OFF position.**
2. Remove the cooking grids and flavor grids.
3. Light the burner on HIGH, then turn the burner to LOW setting. While the burner is lit, remove the control knob from the valve.
4. Locate the FLATHEAD adjustment screw found inside the valve stem (see Fig. 55-1).
5. Using a flathead screwdriver, slowly turn the adjustment screw a little at a time (30° to 45°) in either direction. Adjust the screw as needed until the flame is approximately 1/4" in height from all the burner ports, and the flames are stable.
6. Once the appropriate setting is reached, re-install the control knob and shut off the burner valve.
7. Repeat this procedure for other burner valves, if needed.
8. Re-install the flavor grids, cooking grids, and any other components that were removed.

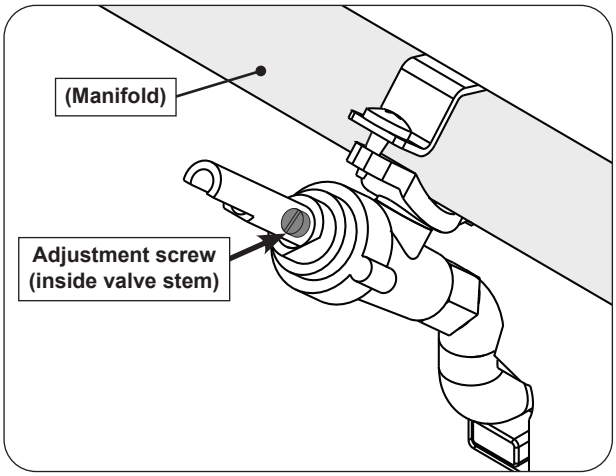

Fig. 55-1 Valve adjustment screw location

NOTES PAGE

Please use this page to record any information about your unit that you may want to have at hand.

TROUBLESHOOTING

If you have trouble with the unit, please use this list to identify the problem. By trying one or more of the solutions to the possible cause, you should be able to solve the problem. If this list does not cover your present problem, or if you have other technical difficulties with the unit, please contact your local dealer.

PROBLEM	POSSIBLE CAUSE	CORRECTION
Accessories do not operate	1. Power source not hooked to power supply	1. Hook external power to unit.
Ignition system failure	1. Power source not hooked to power supply 2. Improper air shutter adjustment 3. Ignition wire disconnected 4. Low gas pressure 5. Front carry-over ports clogged 6. Blown fuse in power supply box 7. Igniter malfunction 8. Igniter switch malfunction on valve	1. Hook external power to unit. 2. Adjust air shutters. 3. Plug wires back into ignition switches. 4. Have the gas co. check pressure at unit. 5. Clean burner ports. 6. Replace the fuse. Reference the POWER SUPPLY FUSE REPLACEMENT section. 7. Contact dealer for replacement. 8. Contact dealer for replacement.
Insufficient heat / low flame	1. Burner ports clogged 2. Improper air shutter adjustment 3. Using propane orifice for natural gas 4. Low gas pressure/flame (propane) 5. Low gas pressure/flame (natural) 6. L.P. regulator hose stuck/damaged	1. Clean burner ports. 2. Adjust air shutters. 3. Check/change orifices. 4. Shut off all valves, including propane tank, and follow lighting instructions exactly. (See important note* below.) 5. Have a qualified professional service technician check for proper gas supply, setup, and pressure. 6. Replace L.P. regulator hose.
Uneven heating	1. Burner ports partially blocked by debris 2. Small spiders or insects in burner 3. Improper air shutter adjustment	1. Remove burners and clean out ports. 2. Inspect burners and orifices for spider webs or other debris that may block flow. 3. Adjust air shutters.
Interior oven lights & knob lights not operating	1. Interior or knob light(s) burned out 2. Light micro switch activation pin positioned incorrectly 3. Light micro switch activation pin malfunction	1. Contact dealer for replacement. 2. Adjust control panel. See CONTROL PANEL REMOVAL section. 3. Contact dealer for replacement.
Burner goes out on LOW	1. Valve "Low" setting needs adjustment	1. Light burner on HIGH, immediately turn to LOW setting. Remove knob from valve and using a small flat screwdriver, slowly turn the adjustment screw in the stem, a little at a time (30° to 45°), in either direction, until the flame is approximately 1/4" in height from burner ports.
Rotisserie noisy	1. Rotisserie out of balance	1. Adjust rotisserie counterbalance.
Rotisserie doesn't turn but lights work	1. Electrical socket circuit breaker is tripped	1. Reset circuit breaker (See Fig. 57-1).

To reset the cart electrical outlets press in hard on the reset (upper) button until you hear an audible click.

Note: The main power feed to the cart must be on for the reset switch to function. Open the grill oven lid and turn on the lights to verify that the unit has electrical power before resetting the breaker.

Fig. 57-1

*** Important:** Propane tanks are equipped with a safety shutdown device that may cause low or no gas/flame at the burners if operating and lighting instructions are not followed exactly. **If you suspect the propane tank safety shutoff is in effect:** 1) Shut off all grill valves. 2) Shut off tank valve. 3) Open and close a main burner valve. 4) Open tank valve. 5) Follow the LIGHTING INSTRUCTIONS. Lighting instructions are located in your owner's manual and printed on the unit's metal drip tray. If the problem persists, continue troubleshooting, or contact your local dealer or R. H. Peterson for assistance.

WARRANTY

PETERSON FIRE MAGIC GRILLS AND ACCESSORIES

LIMITED WARRANTY

R.H. Peterson Co. ("RHP") warrants your Fire Magic® grill to be free from defects in material and workmanship.

Fire Magic cast stainless-steel gas burners, Choice stainless steel U shaped burners, cooking grids, and Barbecue housings are warranted **as long as the original purchaser owns them -- LIFETIME**. (Except as described below.)

Fire Magic brass valves, manifold assemblies, inner liners, porcelain housings (including ovens and barbecue faces), and **backburner assemblies** (except ignition systems) are warranted for **FIFTEEN (15) YEARS**.

Fire Magic Electric Grill stainless steel cooking grids and stainless steel housings are warranted for **TEN (10) YEARS**. (Except as described below.)

Fire Magic built-in pizza ovens and built-in and portable griddles (except ignition system and thermostat) are warranted for **TEN (10) YEARS**.

Fire Magic Infra-red burners, flavor grids, and charcoal stainless steel grills are warranted for **FIVE (5) YEARS**; except for the charcoal pan, charcoal grid, thermometer, and ash catch tray, which are warranted for **ONE (1) YEAR**.

Fire Magic sideburners, exterior Glass Fiber Reinforced Concrete (GFRC) grill island systems, and all other grill, pizza oven and griddle components (except ignition systems and electronic parts) are warranted for **THREE (3) YEARS**.

Fire Magic grill, pizza oven and griddle ignition systems (excluding batteries), electronic components (including lights, thermometers and thermostats) and grill and pizza accessories are warranted for **ONE (1) YEAR**.

A COPY OF YOUR SALES SLIP FOR PROOF OF PURCHASE IS REQUIRED

This warranty applies to the original residential purchaser for products which are installed in the United States or Canada and which are operated and maintained as intended for single family residential usage (if the unit is installed in a multi-user setting, a separate Multi-User Limited Warranty applies and is available from RHP). This warranty is valid only with proof of purchase, commences on the date of purchase, and terminates (both as to original and any replacement products) on the anniversary date of the original purchase of the product per the above schedules.

This warranty covers defects in material and workmanship. This warranty **does not** cover parts which become defective as a result of negligence, misuse, use not in compliance with the Installation and Owner's Manual, accidental damage, improper handling, improper storage, improper installation, **lack of required routine maintenance** (as specified in the Installation and Owner's Manual), electrical damage, local gas impurities or failure to protect against combustible materials. Product must be installed (and gas must be connected) as specified in the Installation and Owner's Manual by a **qualified professional installer**. This warranty **does not** apply to rust, corrosion, oxidation, or discoloration unless the affected part becomes inoperable. RHP products including valves, pilots and controls, are designed and certified to be used as a system. Modifications to products which are not specifically authorized will void this warranty and could render the product to be unsafe. Burners, valves, parts, accessories, remotes, etc. used with this product must be RHP products or this warranty is void.

Warrantied items will be repaired or replaced at RHP's sole discretion. This warranty **does not** cover labor or labor related charges, except as provided by separate specific written programs from RHP. All repair work must be performed by a qualified professional service person and requires prior approval of RHP.

RHP may require the defective product or part to be returned to the factory to determine the cause of failure. RHP will pay freight charges if the product or part is determined to be defective. This warranty does not cover breakage in shipment from our independent distributor to its customer if the damage is determined to have occurred during that shipment.

This warranty specifically excludes liability for **indirect**, **incidental**, or consequential damages. Some states and provinces do not allow the exclusion or limitation of incidental or consequential damages, so the above exclusion may not apply to you. This warranty gives you specified legal rights, and you may have other rights that vary from state to state or province.

For additional information regarding this warranty, or to place a warranty claim, contact the RHP dealer where the product was purchased.

When contacting your RHP dealer or the R.H. Peterson Co., please provide the following information:

- Your name, address, telephone number, e-mail
- Sales receipt showing where purchased and date purchased
- Model number, serial number of product, date code
- Relevant information: installer, additions, repairs, when defect was first noted

TO REGISTER YOUR PRODUCT ONLINE GO TO: WWW.RHPETERSON.COM, AND CLICK ON PRODUCT REGISTRATION. THANK YOU FOR YOUR PURCHASE.

Quality Check

Date:_____

Burner Orifices	Nat.	L.P.	Leak Test:	_____	Model#:	_____
Main:	____	____	Burn Test:	_____	Serial#:	_____
Back:	____	____	Gas Type:	Nat. / L.P.	Air Shutter:	_____
Side/Power:	____	____			Inspector:	_____
Infrared:	____	____				
Other:	____	____				